Ministry of Utility and Telecommunication Sarawak

# GUIDELINES FOR ELECTRICAL WIRING FOR RESIDENTIAL BUILDINGS IN SARAWAK

**Version 2, 2026**

**Electrical Inspectorate Unit (EIU),**
Ministry of Utility and Telecommunication,
1st, 7th, 8th, 9th & 10th Floor, LCDA Tower,
Lot 2879, The Isthmus, Off Jalan Bako,
93050 Kuching, Sarawak, Malaysia
Tel: 082-551000 Fax: 082-551010
Web: https://mut.sarawak.gov.my

## TABLE OF CONTENT


| Chapter | | Title | Page |
|---|---|---|---|
| **Chapter 1:** | 1.1 | Introduction | 1 |
| | 1.2 | Purpose | 1 |
| | 1.3 | References | 2 |
| **Chapter 2:** | **Supply System** | | |
| | 2.1 | Electricity Supply Specifications | 3 |
| **Chapter 3:** | **Electrical Wiring** | | |
| | 3.1 | Legal Requirements | 4 |
| | 3.2 | Planning of Wiring Work | 4 |
| | | 3.2.1 Site Visit | 4 |
| | | 3.2.2 Determining Consumer Load Requirements | 4 |
| | | 3.2.3 Calculating Maximum Load Demand | 4 |
| | | 3.2.4 Submission of the Plan, Drawings and Specifications | 5 |
| | 3.3 | Features of Electrical Wiring | 7 |
| | 3.4 | Examples of Lighting Circuits Schematic Wiring | 12 |
| | 3.5 | Example of Socket Outlets Schematic Wiring | 14 |
| | 3.6 | Final Circuit For 13A Socket Outlets | 15 |
| **Chapter 4:** | **Control and Protection System for Electrical Wiring** | | |
| | 4.1 | Selection of Control and Protection System for Electrical Wiring | 16 |
| | 4.2 | Isolation and Switching | 16 |
| | 4.3 | Protection | 16 |
| | | 4.3.1 Current Protection | 17 |
| | | 4.3.2 Surge Protection Device (SPD) | 18 |

**Chapter 5: Cable Selection**

5.1 Selection of Wiring Cable Type 19

5.2 Factors Related To Cable Current Carrying Capacity 19

5.3 Use of Minimum Cross Sectional Area Ratings of Wiring Conductors 20

5.4 Use of Protection Conductor Minimum Cross Sectional Area Rating In Comparison with Phase Conductor Sectional Area 20

5.5 Functions and Colour Identification of Non Flexible Cables 20

5.6 Flexible Cables 21

5.7 Functions and Colour Identification of Flexible Cables 21

5.8 Conductor Insulation and Types of Wiring 21

**Chapter 6: Electrical Accessories**

6.1 Selection of Wiring Accessories 22

**Chapter 7: Earthing of Electrical Installations**

7.1 Earthing 24

7.2 Classification of Earthing 24

7.3 Types and Functions of Earthing Accessories 24

7.4 Earthing Arrangement Using a TT System 25

7.5 Parts That are Required to be Earthed 26

7.6 Parts That are Not Required to be Earthed 26

7.7 Termination to Earth 26

7.8 Earth Electrode Resistance 27

**Chapter 8: Inspection and Testing of Electrical Wiring**

8.1 Legal Requirements 28

8.2 Testing 28

| | | | |
|---|---|---|---|
| | 8.2.1 | Continuity Test | 29 |
| | 8.2.2 | Insulation Resistance Test | 32 |
| | 8.2.3 | Polarity Test | 34 |
| | 8.2.4 | Earth Electrode Resistance Test | 35 |
| | 8.2.5 | Residual Current Device Test | 37 |
| **Appendix** | I | Safety Requirements for Electrical Wiring Works in Residential Buildings | 39 |
| | II | Table of Cable Current Carrying Capacity | 42 |
| | III | Table of Cable Voltage Drops | 43 |
| | IV | Example of Cable Voltage Drop ($V_d$) Calculations | 44 |
| | V | Supervision and Completion/ Test Certificate (Form EIU/ST/1.0) | 45 |
| | VI | Form EIU/ST/1.0 | 49 |
| | VII | Symbols | 52 |

# CHAPTER 1

## 1.1 INTRODUCTION

These Guidelines are based on the Electricity Ordinance (Chapter 50), The Electricity Rules 1999, MS IEC 60364:2003 Standard: Electrical Installations of Buildings, MS 1936:2006 Standard: Electrical Installations of Buildings – Guide To MS IEC 60364, MS 1979:2007 Standard: Electrical Installation of Buildings – Code of Practice.

The Guidelines were formulated through discussions with representatives from SESCO, JKR, Electrical Association, Consultants and technical officers of the Electrical Inspectorate Unit and comments from the industry.

The Electrical Inspectorate Unit (EIU) expresses its gratitude to all those involved, and especially to SESCO, JKR, Electrical Association and the Consultant who have cooperated significantly in the formulation and completion of these guidelines.

## 1.2 PURPOSE

The Guidelines for Electrical Wiring In Residential Buildings has been prepared as a wiring guide for all Wiremen and Electrical Installation Contractors for undertaking electrical wiring in residential buildings to conform to The Electricity Rules 1999.

The Guidelines are prepared in a concise and compact manner to facilitate the electrical wiring of residential buildings to be done adequately and to ensure its safety of use while meeting basic wiring requirements.

The Guidelines will also be useful for owners of residential buildings or wiring installations to recognize the requirements of safe and adequate electrical wiring.

It is hoped that the Guidelines will ensure that electrical wiring will be based on correct safety procedures and regulations and to avoid possible electrical accidents. Safety requirements in electrical wiring works have to be met to eliminate accidents causing physical injuries and loss of life or property. These requirements are as stated in Appendix 1.

## 1.3 REFERENCES

- ✓ Electricity Ordinance (Chapter 50);
- ✓ The Electricity Rules, 1999;
- ✓ MS IEC 60364:2003 Standard: Electrical Installations of Buildings;
- ✓ MS 1936:2006 Standard: Electrical Installations of Buildings – Guide To MS IEC 60364; and
- ✓ MS 1979:2007 Standard: Electrical Installation of Buildings – Code of Practice

# CHAPTER 2
# SUPPLY SYSTEM

## 2.1 Electricity Supply Specifications

Electricity supply for domestic consumers, according to MS IEC 60038 standards, meets the following specifications: -

i) Single phase supply with nominal voltage of 240V, range +5%, -10%;
ii) Three phase supply with nominal voltage of 415V, range +5%, -10%;
iii) Permitted frequency is 50Hz + 1%;
iv) Earthing system type (TT System) as in Figure 2.1 and Figure 2.2.

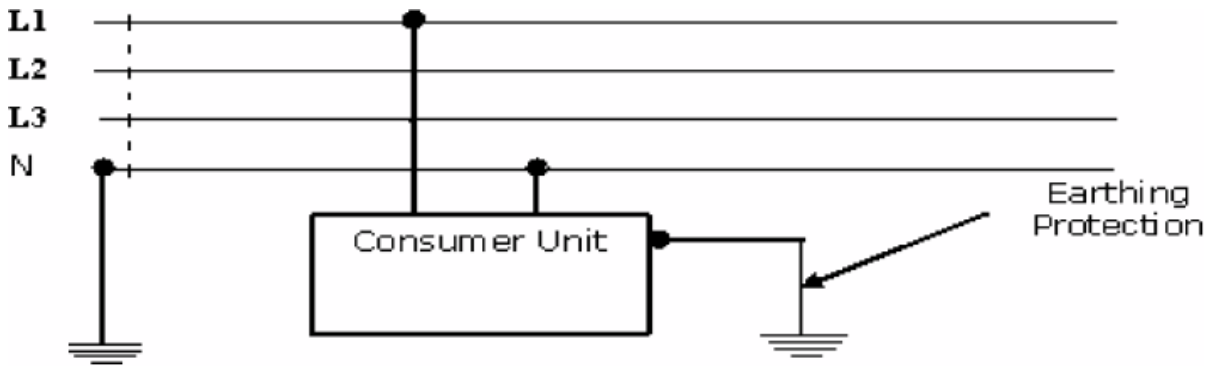


Figure 2.1: TT System (Single Phase)

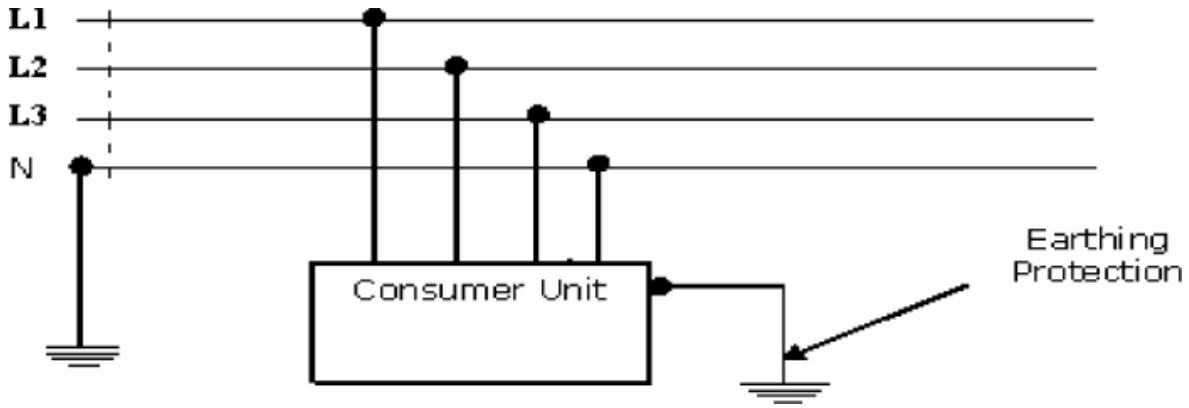


Figure 2.2: TT System (Three Phase)

All electrical equipment used must be suitable for operation with the stated electricity supply specifications.

# CHAPTER 3

# ELECTRICAL WIRING

## 3.1 Legal Requirements

Sub-rule 11(1) of The Electricity Rules, 1999 states that all wiring or rewiring of an installation or extension to an existing installation which shall be carried out by an Electrical Installation Contractor, have to obtain the approval in writing from a licensee or supply authority.

## 3.2 Planning of Electrical Wiring Work

Prior to carrying out wiring work, the wireman/contractor should plan and determine the tasks to be undertaken so that the work carried out is tidy, neat and safe to be used. The wireman/contractor shall: -

i) Undertake a site visit;
ii) Determine the consumer load requirements;
iii) Calculate the maximum load demand; and
iv) Submit the plans, drawings and specifications.

The planning flow chart for building wiring installations is as shown in Figure 3.1.

### 3.2.1 Site Visit

The purpose of the site visit is to determine: -

i) Electrical equipment suitable for use;
ii) Maximum load demand;
iii) Single or three phase incoming supply;
iv) Type of wiring; and
v) Equipment arrangement.

### 3.2.2 Determining Consumer Load Requirements

With the aid of the building floor plans, the installation requirements such as the proposed load, placement of electrical equipment and installation design plans can be determined.

### 3.2.3 Calculating Maximum Load Demand

The estimate of the maximum load demand is for determining the specifications of the wiring equipment such as the cables and accessories and subsequently to prepare the electrical installation plans.

According to clause 311 of MS IEC 60364 Part 1, to determine the maximum demand for each circuit while ensuring an economic and reliable design within the permitted voltage drop limits. Diversity factors may be taken into account.

The maximum current demand calculations for each circuit must be prepared. These details will show the current requirements, in amperes, for each phase and also assist in determining the cable sizes.

Refer to the Third Schedule (Table A and Table B) and Sub-rule 11(2) of The Electricity Rules, 1999 to estimate the maximum current demand and the diversity factors that may be used for domestic installations.

### 3.2.4 Submission of the Plans, Drawings and Specifications

Rule 64 of The Electricity Rules, 1999 in Part VI of the Second Schedule states that the eligibility of Competent Person to submit plans is as follows:-

i) Electrical Installation Contractor – Low voltage and receiving energy from licensee via a switchgear rated at 60 amperes and below; and

ii) Electrical Supervisor – Low voltage and receiving energy from licensee via a switchgear rated at 100 amperes and below

**Figure 3.1: Procedures for Issuance of Supervision and Completion/Test Certificate**

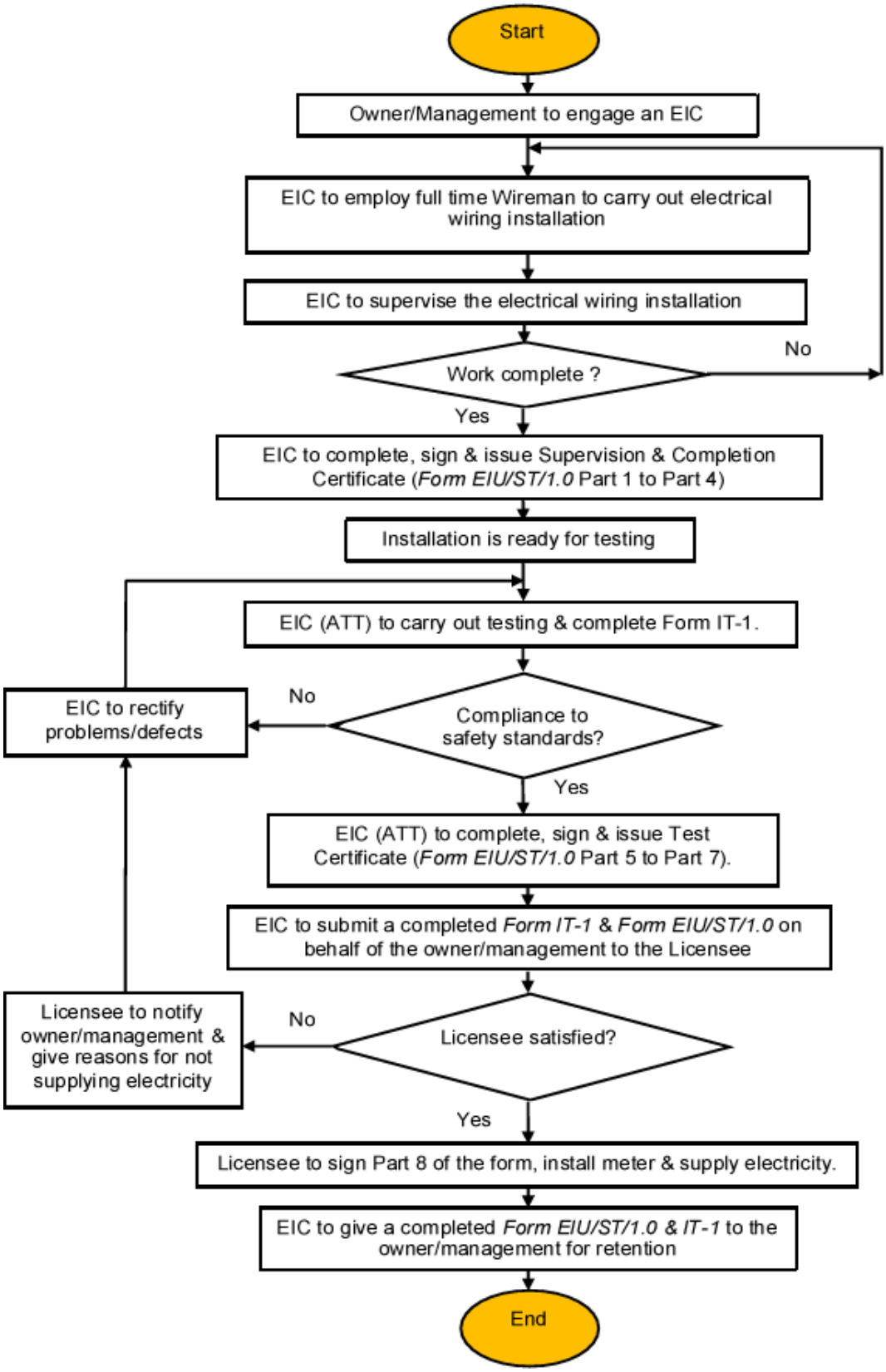

## 3.3 Features of Electrical Wiring

Electrical wiring composes of electrical equipment such as cables, switch boards, main switches, miniature circuit breakers (MCB) or fuses, residual current devices (RCD), lighting points, power points, lightning arrestors, etc.

a) Example 1 of a single-phase consumer electrical wiring is as shown in Figure 3.2.

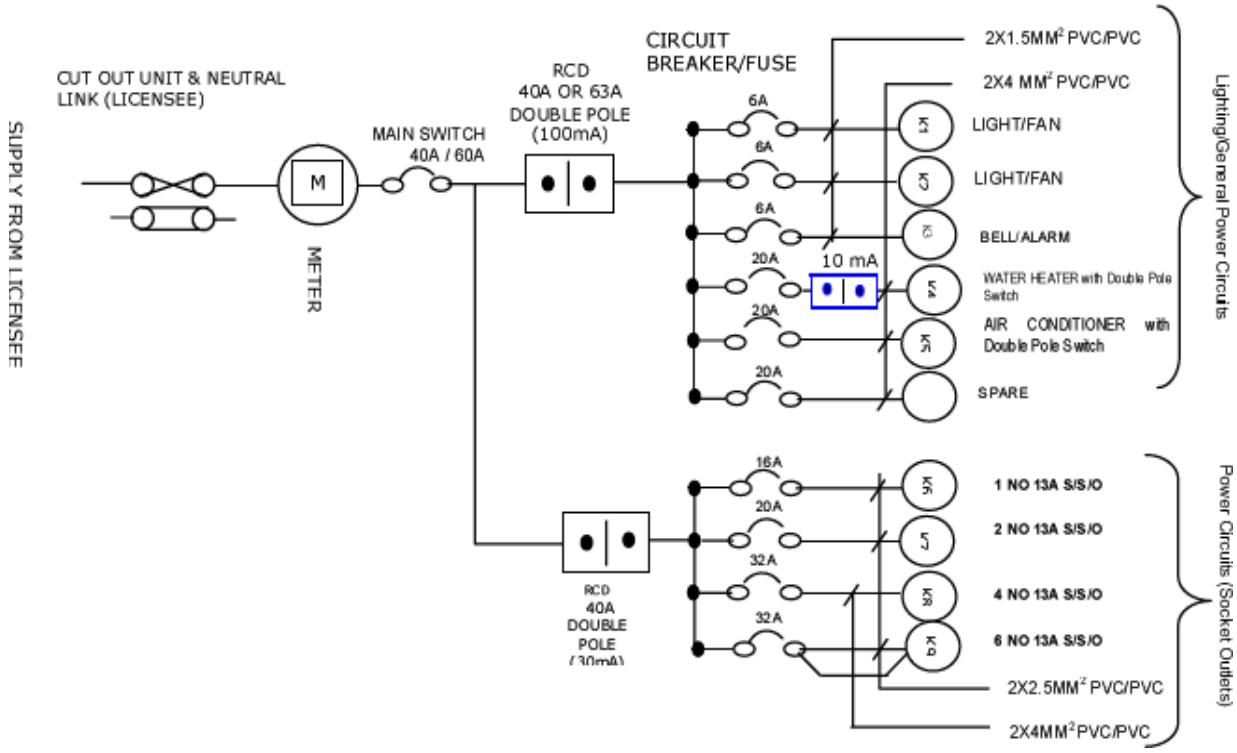


Figure 3.2: Example 1 of a Single phase Consumer Electrical Wiring

b) Example 2 of a single phase consumer electrical wiring is as shown in Figure 3.3

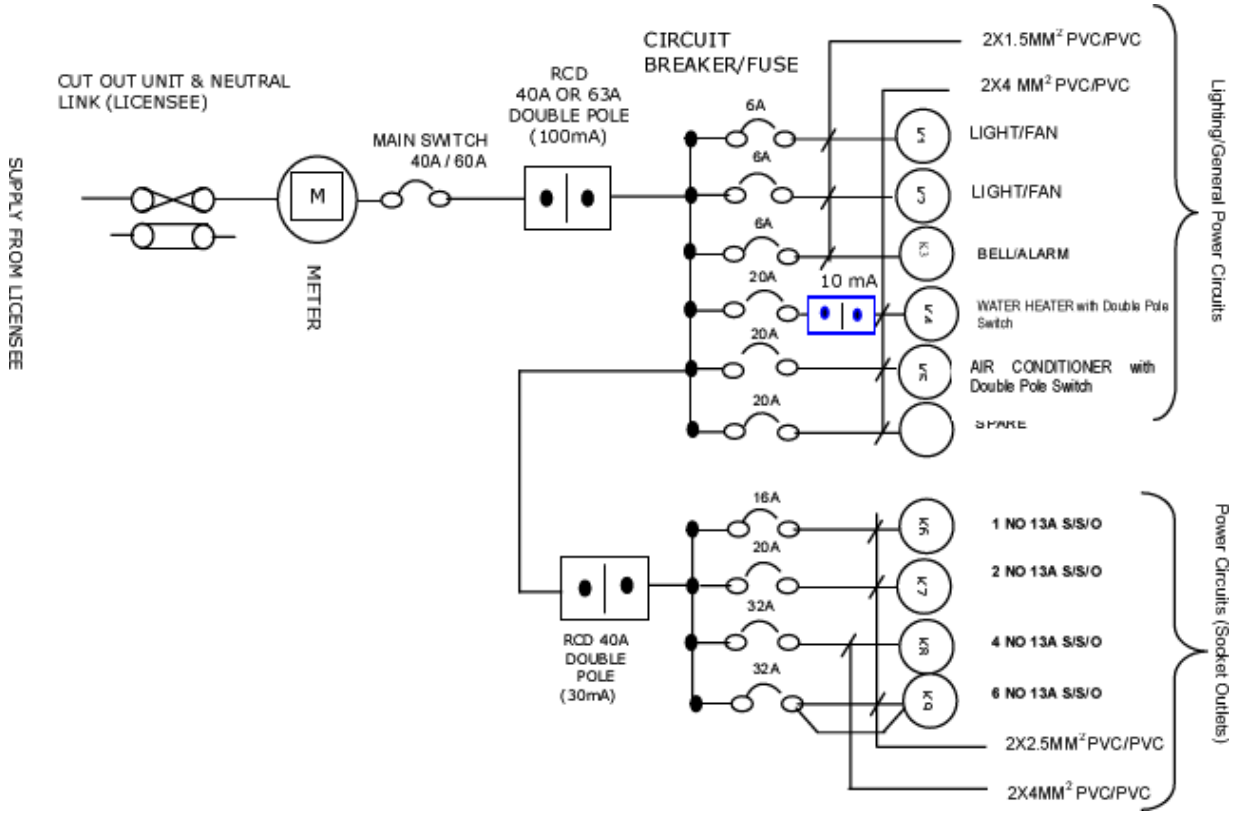


Figure 3.3: Example 2 of a Single phase Consumer Electrical Wiring

c) Example 3 of a single phase consumer electrical wiring is as shown in Figure 3.4

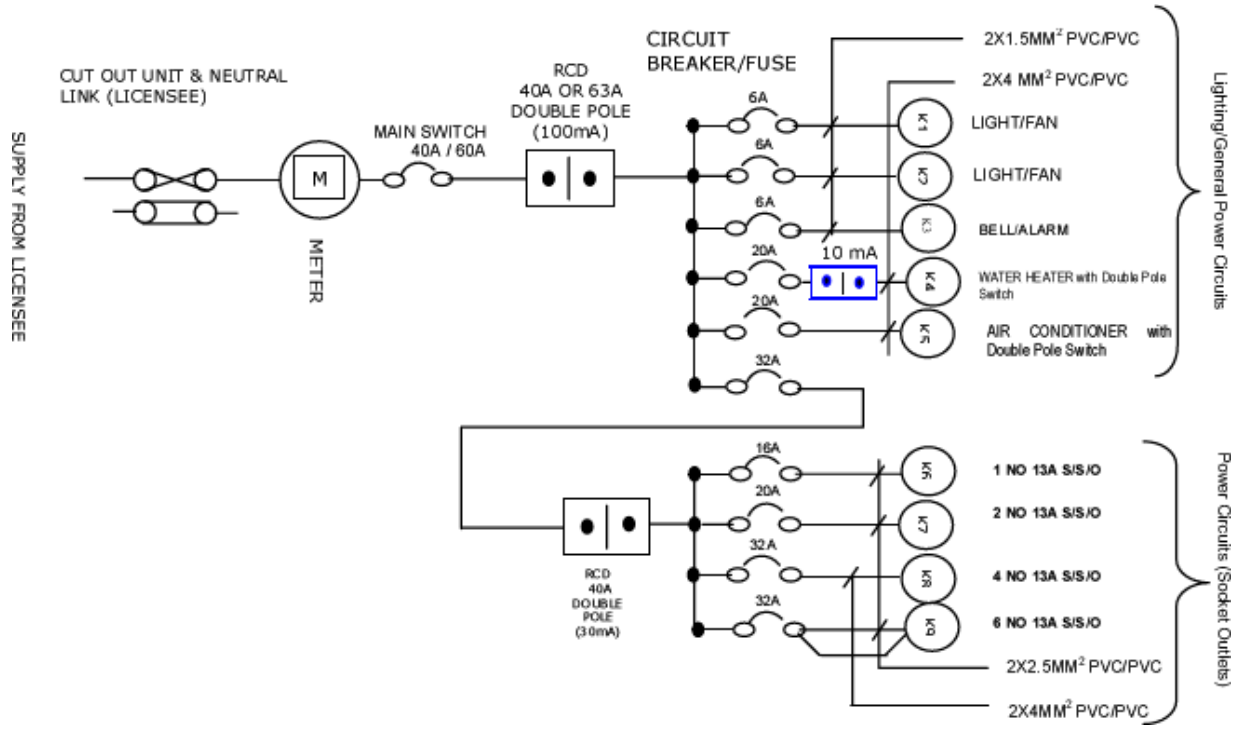


Figure 3.4: Example 3 of a Single phase Consumer Electrical Wiring

**Note: The wiring in Figure 3.3 and Figure 3.4 should incorporate a main RCD with a time delay of not exceeding 200ms.

d) Example 1 of a three phase consumer electrical wiring is as shown in Figure 3.5

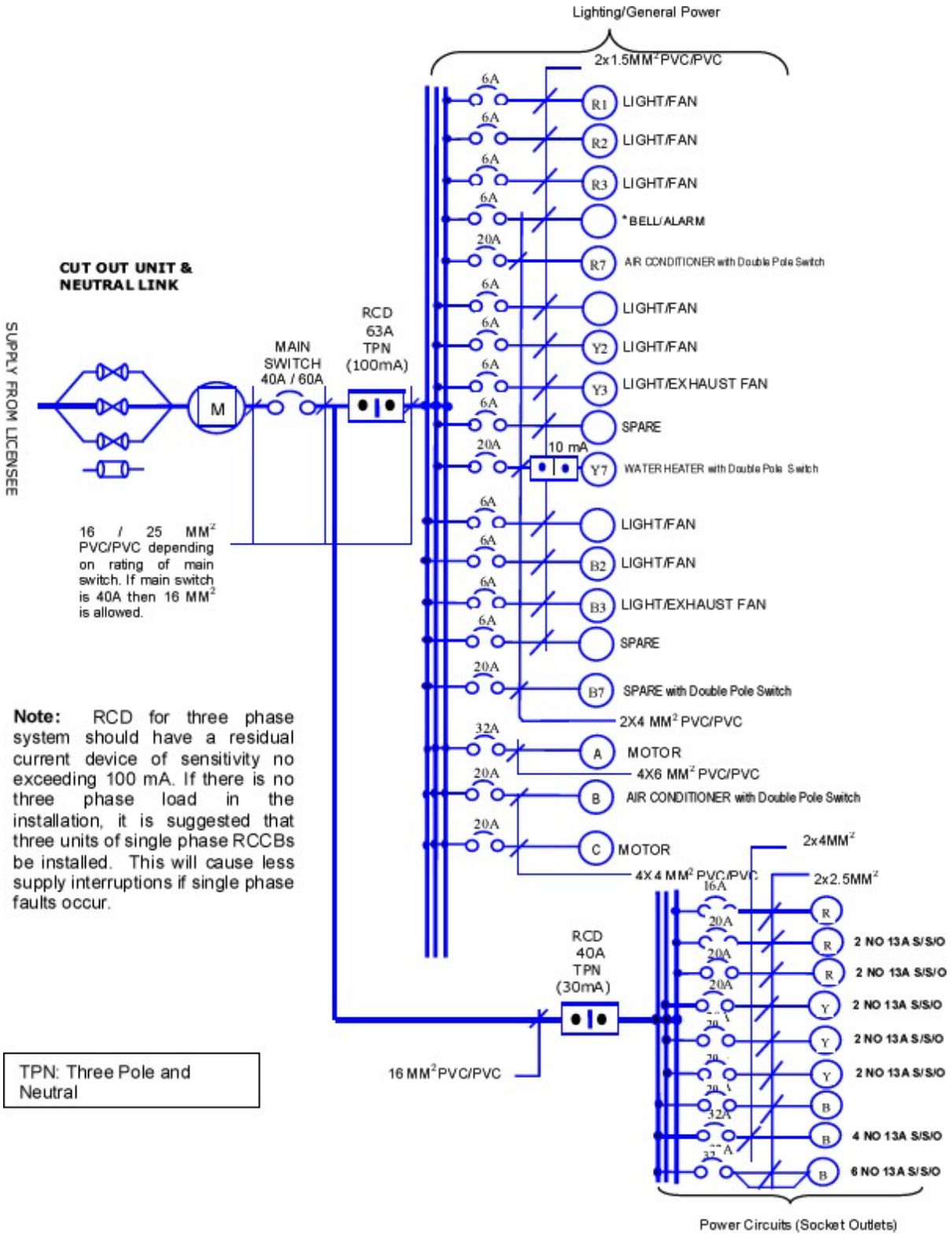


Figure 3.5: Example 1 of a Three phase Consumer Electrical Wiring

e) Example 2 of a three phase consumer electrical wiring is as shown in Figure 3.6.

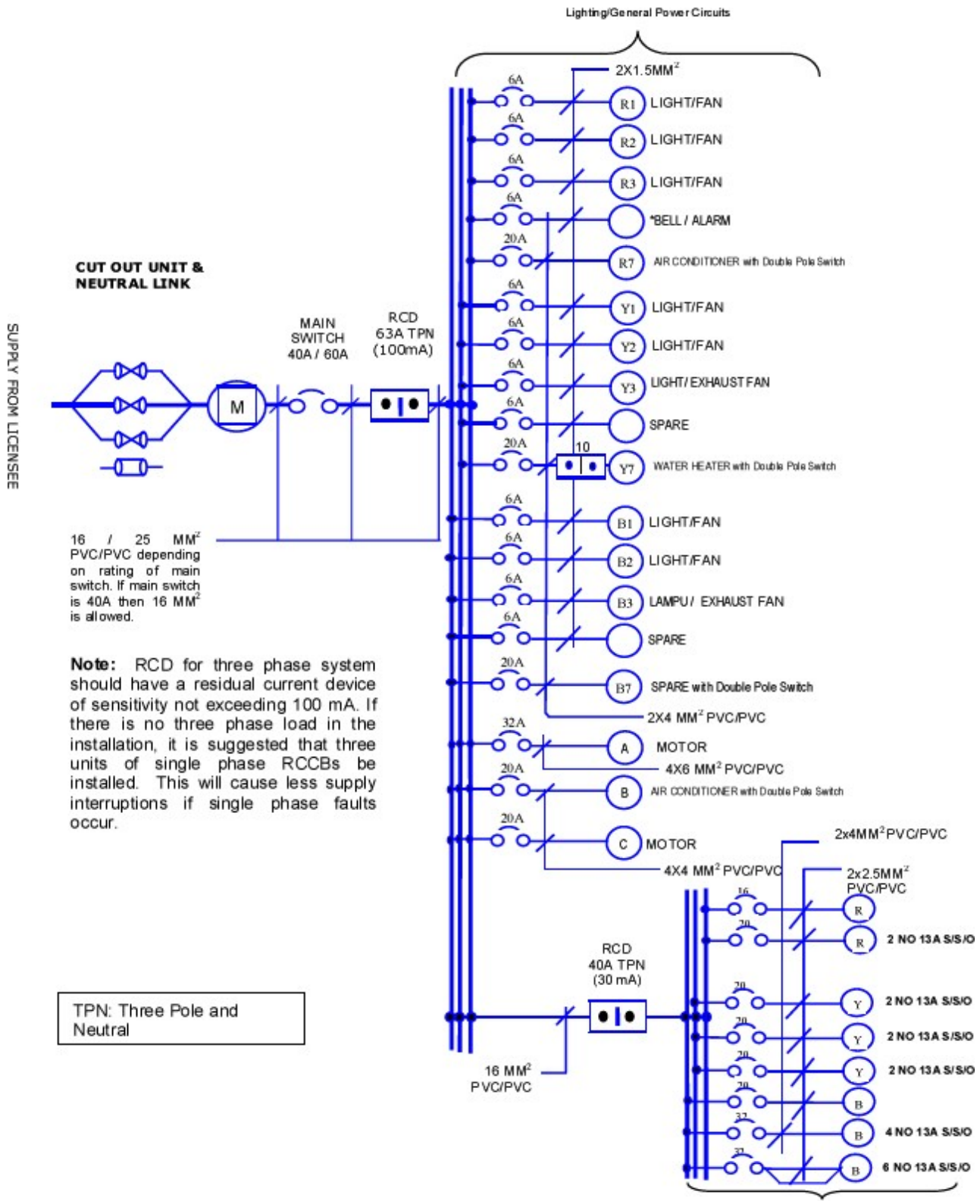


Figure 3.6: Example 2 of a Three Phase Consumer Electrical Wiring

## 3.4 Examples of Lighting Circuits Schematic Wiring

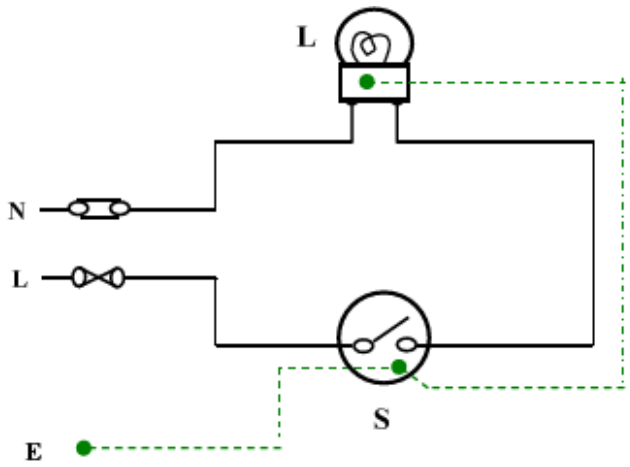


1 Single light point controlled by a one way switch

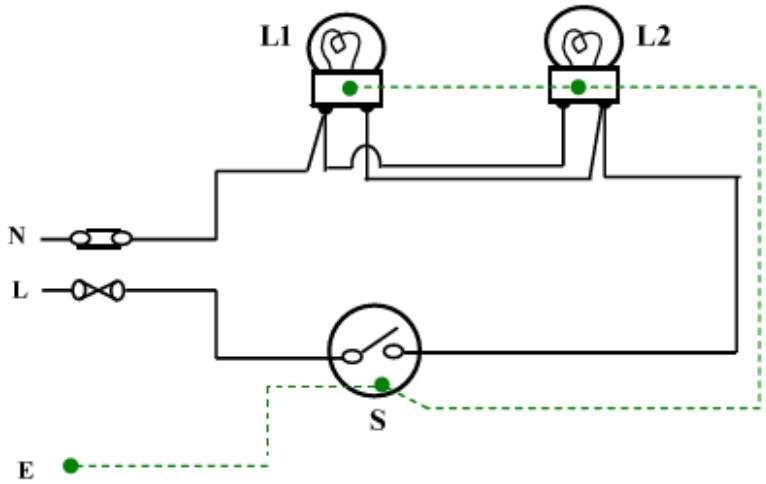


2 Two light points controlled by a one way switch

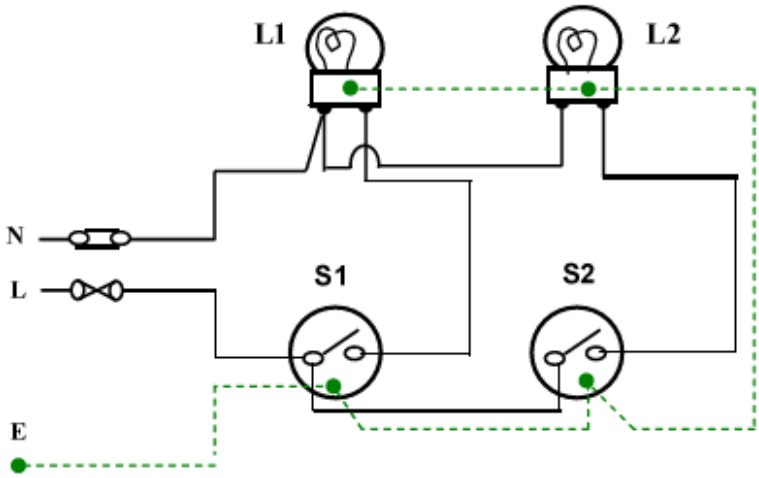


3 Two light points controlled separately by two one way switches

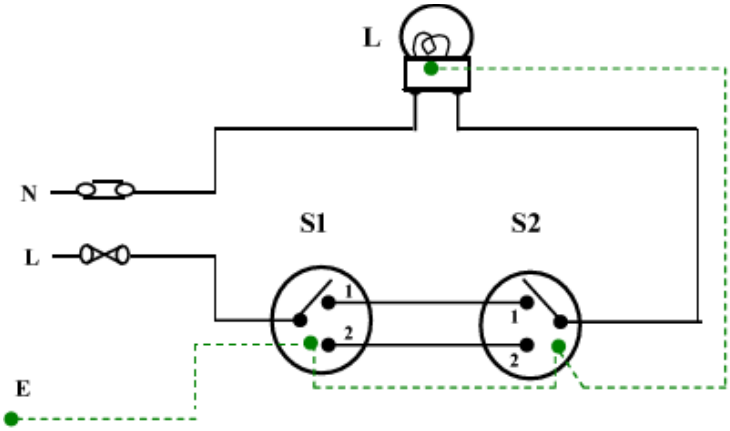


4 Single light point controlled by a two way switch

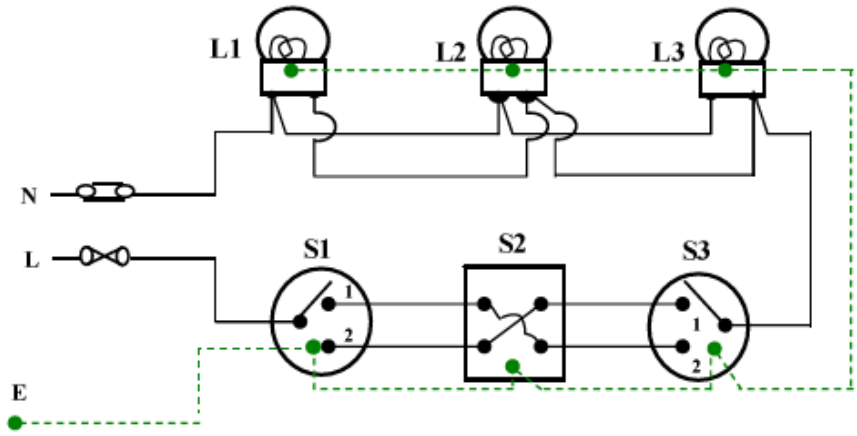


5 Three light points controlled by two way switches and intermediate switch

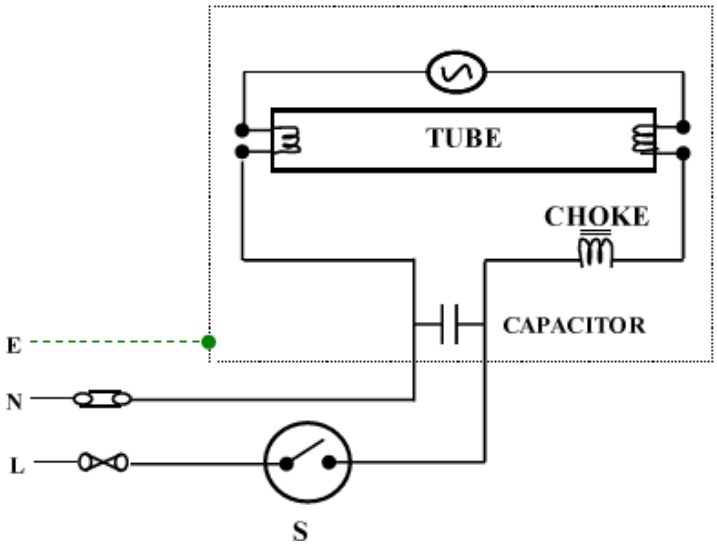


6 Single fluorescent light point controlled by a one way switch

## 3.5 Examples of Socket Outlet

7 Socket Outlet – Single Socket

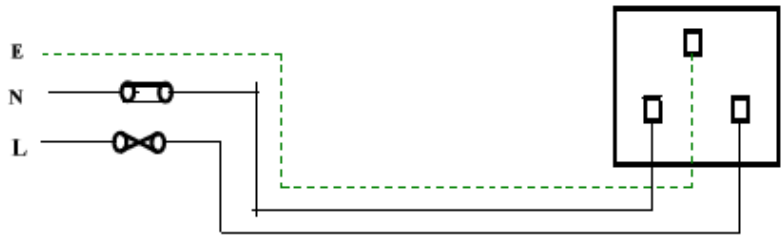


8 Socket Outlets – Radial Connection

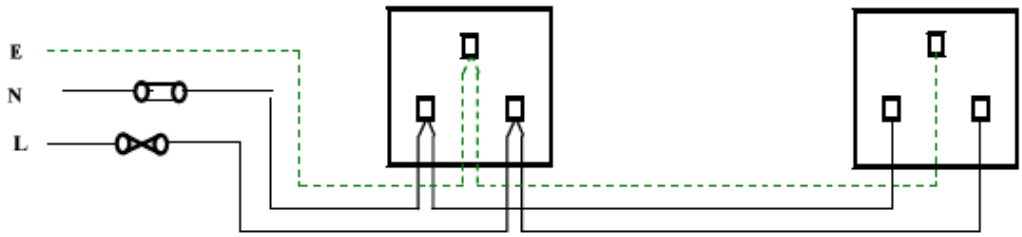


9 Socket Outlets – Ring Circuit Connection

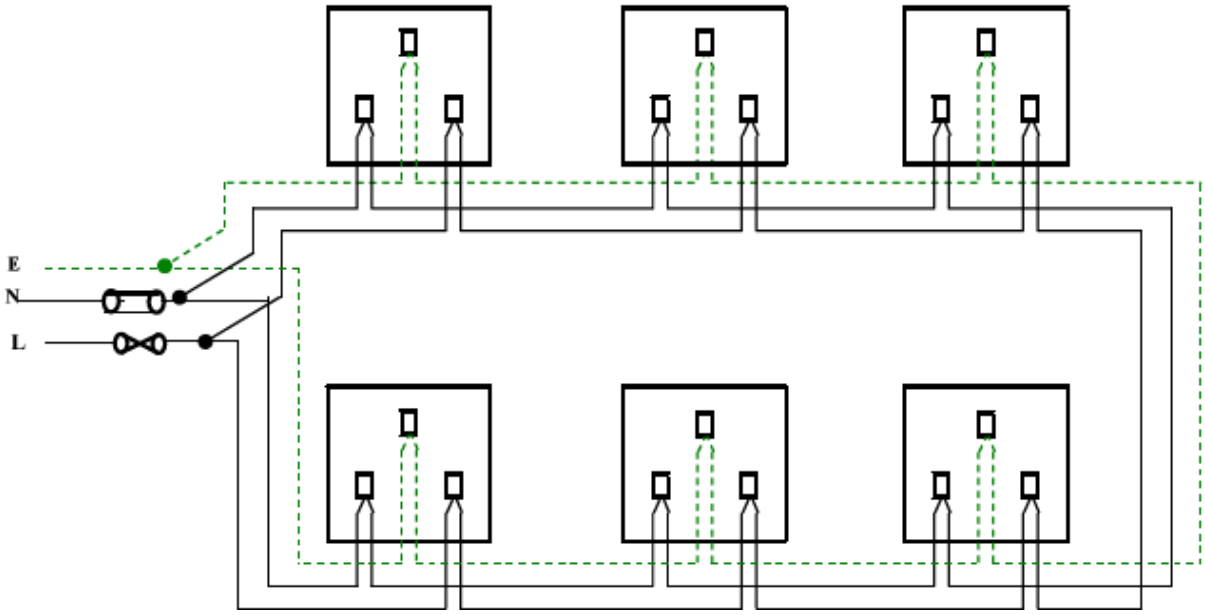

## 3.6 Final Circuit For 13A Socket Outlets

The total number of final circuits needed, the size of the conductors used and the maximum permitted floor area to be served can be determined by being guided by the table below.

| **Circuit Type** | **Over Current Protection Rating (Fuse or MCB)** (Ampere) | **Minimum Size of Copper Conductor in PVC or** Rubber Insulation ($mm^2$) | **Maximum Floor Area** ($m^2$) |
|---|---|---|---|
| Ring | 30 or 32 | 2.5 | 100 |
| Radial | 30 or 32 | 4.0 | 50 |
| Radial | 20 | 2.5 | 20 |

# CHAPTER 4

# CONTROL AND PROTECTION SYSTEM FOR ELECTRICAL WIRING

## 4.1 Selection of Control and Protection System for Electrical Wiring

Control and protection of a wiring is a system of separation/isolation and switching, together with the protection system which are needed in every domestic wiring installation.

## 4.2 Isolation and Switching

Examples of isolation and switching are switches, power plugs, socket outlets and circuit breakers. Their function is to manually connect and break the supply in a particular circuit without interfering with other circuits. They also aim to prevent the danger of electrical shocks during maintenance, testing, fault finding and repair works.

## 4.3 Protection

This provides protection from dangers caused by electrical currents, such as over current, earth leakage current, short circuit, lightning, etc. to the wiring system, electrical equipment or consumer. The circuit below shows the isolation and protection devices which must be installed in a domestic electrical wiring system.

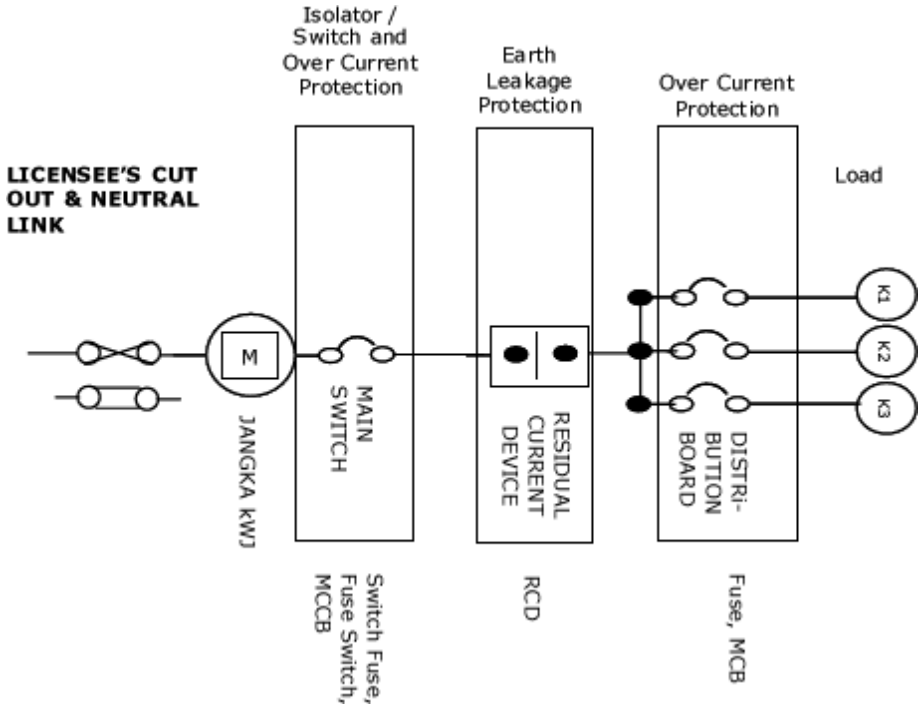


Figure 4.1: Isolation and Protection Devices for Domestic Electrical Wiring

### 4.3.1 Current Protection

In general, protection from the dangers of current can be divided into two aspects, namely:

i) Overcurrent Protection (Over Load or Short Circuit)

Properly rated circuit breakers or fuses suitable for over load or short circuit protection must be used.

The circuit breakers or fuses must be installed on the live conductors only. For three phase circuits, all the circuit breakers or fuses must be combined in one set of circuits.

Selection of overcurrent devices must be based on the short circuit fault current levels of the circuit breaker or main switch (kA).

ii) Earth Leakage Current Protection

Properly rated Residual Current Devices (RCD) must be used for protection from earth leakage currents (to prevent electric shocks).

a) Sub-rule 36(1) of The Electricity Rules, 1999 states that "for an installation in a place of public entertainment, protection against earth leakage current shall be afforded for any final circuit supplying electricity to an equipment which is intended to provide service to the public or which is intended to be accessible to, used by or operated by the public by a residual current device having a rated residual operating current not exceeding 10 milliamperes";

b) Sub-rule 36(2) of The Electricity Rules, 1999 states that "for an installation in a place where the floor is likely to be wet or where the wall or enclosure is of low electrical resistance, protection against earth leakage current shall be afforded for any final circuit supplying electricity to any equipment, either individually or in a group, by a residual current device having a rated residual operating current not exceeding 10 milliamperes";

c) Sub-rule 36(3) of The Electricity Rules 1999 states that "for an installation where hand-held equipment, apparatus or appliance is used or is likely to be used, protection against earth leakage current shall be afforded for any final circuit, either individually or in a group, by a residual current device having a rated residual operating current not exceeding 30 milliamperes"; and

d) Sub-rule 36(4) of The Electricity Rules, 1999 states that "for an installation, other than the installations mentioned in sub-rules (1), (2) and (3), protection against earth leakage current shall be afforded for any final circuit, either individually or in a group, by a residual current device having a rated residual operating current not exceeding 100 milliamperes unless:-

i) for functional reasons, it is impractical to provide the protection; or

ii) it is unsafe or even dangerous to provide the protection.

**Requirements For the Use of Residual Current Circuit Breakers (Sensitivity) Based on Rules 36, The Electricity Rules 1999**

| No | Installation Type | Residual Current Device Sensitivity (Maximum) | Requirement |
|---|---|---|---|
| 1. | Overall Wiring (Single Phase or Three Phase) | 100mA (0.1A) | Mandatory |
| 2. | Final Circuit for Power (13A socket outlets) | 30mA (0.03A) | Mandatory |
| 3. | Wet places (toilets and wet kitchens) /Water heater circuits | 10mA (0.01A) | Mandatory |

### 4.3.2 Surge Protection Device (SPD)

SPDs are encouraged to be used for protection against heavy lightning strikes (lightning surge) or significant over voltages (overvoltage surge). They can be installed near the incoming supply (before the RCD).

Specification for Surge Protection Devices:

| | |
|---|---|
| Discharge Current Rating | t 5 kA |
| Conductor Type | Copper |
| Minimum Conductor Cross Sectional Area | 4 mm2 |
| Connection Distance from Incoming Supply | < 0.5 m |

# CHAPTER 5

# CABLE SELECTION

## 5.1 Selection of Wiring Cable Type

The selection of the cable size has to take into consideration the following:

i) All wiring cables must be PVC or PVC/PVC insulated with copper conductors. Conductors with cross sectional areas of 16mm$^2$ or less must be of copper. Aluminium conductors are not permitted. Refer to Table 4D1A in **Appendix II** for the current carrying capacities of copper conductor;

ii) Cables for swimming pools must be water resistant PE (polyethylene) insulated;

iii) The selected cable must be capable of delivering the electrical energy efficiently;

iv) The cable size allows it to carry the current without heating the cable;

v) The voltage drop must not exceed 4% of the supply voltage. Refer to Table 4D1B in **Appendix III;**

vi) The cable insulation must be suitable for the surrounding conditions of the installation, such as the ability to withstand the surrounding temperatures and the ability to provide mechanical protection;

vii) Each conductor in the installation must be protected from overcurrent by means of overcurrent protection devices needed to prevent damage to the cable insulation.

## 5.2 Factors Related to Cable Current Carrying Capacity

The following factors in relation to the current carrying capacity of cables must be taken into consideration:

i) Surface wiring using clips – group factor;

ii) Wiring using conduits – space factor 40%;

iii) Wiring using ducts – space factor 45%;

iv) Concealed wiring – group factor; and

v) Concealed wiring using ducts – surrounding temperature factor

## 5.3 Use of Minimum Cross Sectional Area Rating of Wiring Conductors

The following are the minimum cross-sectional areas of conductors based on their applications:

| Conductor Cross Sectional Area in mm 2 | Material | Application |
|---|---|---|
| 1.5 mm2 | Copper | Lighting/fan circuit |
| 2.5 mm2 | Copper | 13A socket outlet circuit |
| 4.0 mm2 – 6.0 mm2 | Copper | General Power Circuit (example: water heater, cooker unit, motor/pump) |
| 16.0 mm2 / 25.0 mm2 | Copper | Main Circuit |

## 5.4 Use of Protection Conductor Minimum Cross Sectional Area Rating in Comparison with Phase Conductor Cross Sectional Area

The following table shows the protection conductor minimum cross-sectional area in comparison with the phase conductor cross sectional area:

| **Phase Conductor Cross Sectional Area** (S) ($mm^2$) | **Protection Conductor Minimum Cross Sectional Area** ($mm^2$) |
|---|---|
| S d 16 | S |
| 16 < S d 35 | 16 |
| S >35 | S/2 |

## 5.5 Functions and Colour Identification of Non-Flexible Cables

The following table shows the functions and colour identification of non-flexible cables:

| **Function** | **Cable Colour** |
|---|---|
| Phase of Single Phase Circuit | Red, Yellow or Blue |
| Red Phase of Three Phase Circuit | Red |
| Yellow Phase of Three Phase Circuit | Yellow |
| Blue Phase of Three Phase Circuit | Blue |
| Neutral of Circuit | Black |
| Protection/Earthing Conductor | Green or Green-Yellow |

## 5.6 Flexible Cables

5.6.1 Flexible cables of cross-sectional area less than 4.0 $mm^2$ are used in installations for electrical accessories such as ceiling roses, lamp fixtures or attachments, socket plugs for mobile appliances, etc.

5.6.2 Flexible cables shall not be used for permanent wiring.

5.6.3 Flexible cables for the permanent use of electrical appliances should not exceed 3 meters in length.

## 5.7 Functions and Colour Identification of Flexible Cables

| No. of Cores | Function | Cable Colour |
|---|---|---|
| 1, 2 or 3 | Phase Conductor | Brown |
| | Neutral Conductor | Blue |
| | Protection Conductor | Green or Green-Yellow |
| 4 or 5 | Phase Conductor | Brown or Black |
| | Neutral Conductor | Blue |
| | Protection Conductor | Green or Green-Yellow |

## 5.8 Conductor Insulation and Types of Wiring

Various material and insulation layers are used for conductor protection. Cable selection in accordance to insulation layers must be done correctly for the type of the wiring installation as shown in the table below:

| Conductor Insulation Layer | Wiring Type |
|---|---|
| Single Insulated Conductor | Conduit, Duct or Concealed |
| Double Insulated Conductor | Surface |
| Armored PVC Insulated Conductor | Underground Cable |

# CHAPTER 6

# ELECTRICAL ACCESSORIES

## 6.1 Selection of Wiring Accessories

i) All wiring accessories to be used have to be of those approved by the Electrical Inspectorate Unit and labeled with labels issued by SIRIM.

ii) For all wiring using UPVC conduits: -

a) Switches, socket outlets, 3 pin plugs, ceiling roses, connectors, sockets – construction material shall be of polycarbonate type.

iii) For all wiring using metal conduits: -

a) Switches, socket outlets and connectors – construction material shall be of metal clad type, and

b) All accessories shall be effectively earthed.

iv) **Switch fuse** used in single phase installations shall have the fuse permanently connected and not move with the fuse.

v) **Fuse switch** used in 3 phase domestic installations also has fuse and switch. The fuse connector is installed together to allow the fuse to move simultaneously with the switch.

**vi) Lamp:**

a) Fluorescent lamps using magnetic ballasts (watt loss not exceeding 6 watts) shall be equipped with dry paper type capacitor;

b) Fluorescent lamps using electronic ballasts or high frequency electronic ballasts do not need capacitors;

c) Outdoor domestic lamp installations shall use weather proof and water proof lamps;

d) Submerged light installations (example in swimming pools, fountains, etc.) shall have water proof lamps with a voltage not exceeding 12 Volt AC.

vii) **Electric water heaters** is divided into 2 types, namely instantaneous water heaters and stored water heaters (storage tank type)

a) Instantaneous water heaters shall be equipped with a 2 pole control switch and its own residual current device. Storage water heaters (storage tank type) shall be installed with an isolator and its own residual current device; and

b) Water heaters exceeding 3kW shall be permanently connected to a 20A/30A rated circuit breaker/fuse with an isolator switch and residual current device.

viii) **Electric cookers** exceeding 3kW shall have its own circuit connected permanently to a 30A rated circuit breaker or fuse with an isolator switch and cooker control unit incorporated with a 13A socket outlet. Two or more cooker appliances may be installed in the same room within a distance of 2 meters.

ix) **Electric motors** (fence gate, air conditioners, fountains, swimming pools, fish ponds, water pumps) exceeding 373W but not exceeding 2238W, shall be connected permanently to a 20A/30A rated circuit breaker/fuse together with an isolator, motor starter and 15A socket outlet. The motor starter shall be of Direct-On-Line type with the appliance together with the contactor, overload relay and on-off control. The circuit breaker/fuse which controls the motor circuit shall be capable of withstanding the starting current of the motor.

x) **Electric bells –** the circuit shall have a push button switch and a AC/DC transformer.

xi) **Ceiling fans** shall conform to Clause 21.101 of the MS 1219:2002 standard with regards to test on the suspension system of ceiling fans.

# CHAPTER 7

# EARTHING OF ELECTRICAL INSTALLATIONS

## 7.1 Earthing

Earthing is a connection system between the metallic parts of an electrical wiring system and the general mass of the earth. This will provide an easy path with a low impedance or resistance to earth to enable the protection system to operate effectively. It will thus ensure safety to human beings/consumers from the dangers of electric shocks if earth leakage currents are present. In general, an electrical installation is earthed because of: -

i) Safety reasons.

ii) Protection system requirements.

iii) Need to limit over voltages.

iv) Need to provide a path for electrical discharge.

v) Legal requirements.

## 7.2 Classification of Earthing

Generally, earthing can be divided into 2 parts, namely:

**i) System Earthing**

a) To isolate the system under fault conditions;
b) To limit the potential difference between conductors which are not insulated in an area;
c) To limit the occurrence of over voltages under various conditions.

**ii) Equipment Earthing**

Equipment earthing is undertaken to protect human beings/consumers. If a live source comes into contact with the equipment body, electrical energy will flow to the earth, without flowing through the human being/ consumer's body. This is because of the fact that the human body has a greater resistance compared with the resistance to earth.

## 7.3 Types and Functions of Earthing Accessories

Earthing accessories are as follows:

**i) Earthing Electrode**

Copper jacketed steel core rods are used as electrodes for domestic wiring.

**ii) Equipotential Bonding**

This is the conductor which is connected between the consumer earthing point and the exposed metallic part. The minimum cable size for this purpose is 10 $mm^2$.

**iii) Protection Conductor**

This is the conductor which connects the consumer earthing point with other parts of the installation which needs earthing. Its size is as follows:

a) Same size as the phase cable up to a size of 16mm$^2$,

b) 16 mm$^2$, if the phase cable size is between 16 mm$^2$, and 35 mm$^2$,

c) Half the size of the phase cable if the size of the phase cable exceeds 35 mm$^2$.

## 7.4 Earthing Arrangements Using a TT System

i) The first alphabet indicates the earthing arrangements from the supply side.

ii) The second alphabet indicates the earthing arrangement in the consumer's installation.

T – first :Indicates that the supply system has its own earthing arrangements

T – second :Indicates that all metallic frames of the electrical appliances, etc. are connected directly to earth.

The earthing arrangement using a TT system is as shown in Figure 7.1.

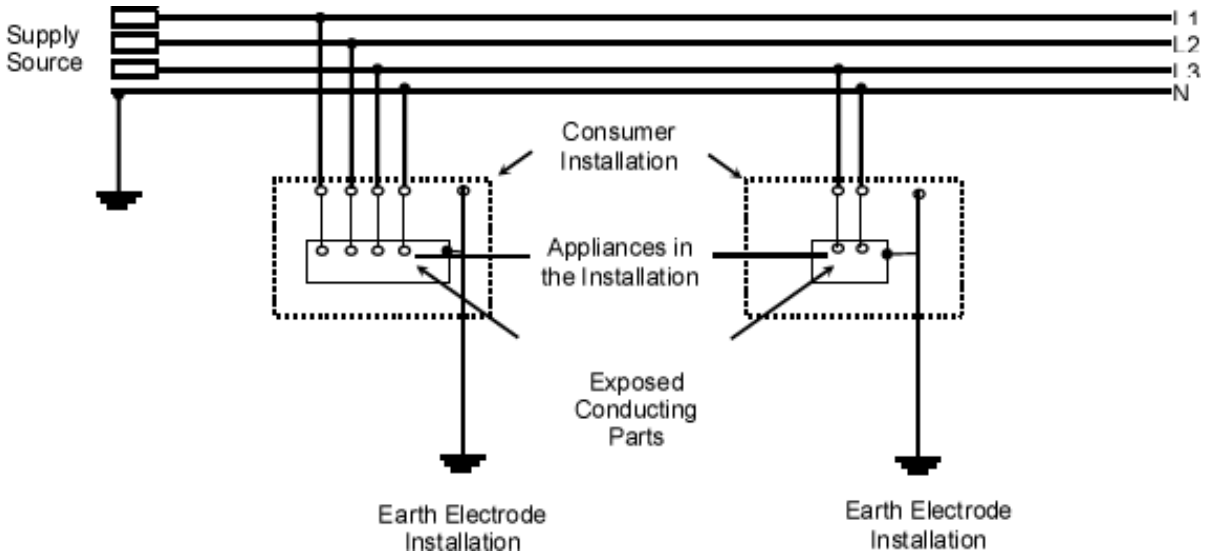


Figure 7.1: TT System Earthing

## 7.5 Parts that are Required to be Earthed

i) All metallic structures in the wiring system (non-current carrying) such as metallic covers, conduits, ducts, the armour of catenary wires, etc.;

ii) A secondary winding point in a transformer; and

iii) Frame of metal roof truss.

## 7.6 Parts that are not Required to be Earthed

i) Short, isolated metallic parts for mechanical protection of cables which have non-metallic sheaths other than conduits which are connected at entry points between the building and conduits which protect discharge lamp cables;

ii) Cable clips for installing cables;

iii) Metallic covers for lamps;

iv) Small metallic parts such as screws and name plates which are isolated by means of insulation;

v) Metallic lamp parts for filament lamps in water proof floors.

## 7.7 Termination to Earth

The termination to earth is done as shown in Figure 7.2.

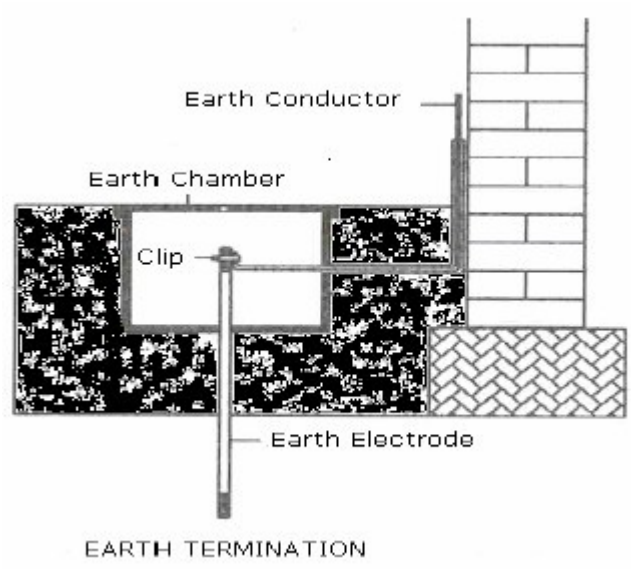


Figure 7.2: Termination to Earth

The earth chamber is of concrete or PVC while the earth electrode is of copper jacketed steel core rod type.

## 7.8 Earth Electrode Resistance

The maximum permitted earth electrode resistance for different types of installations is as shown in the Table below:

| | |
|---|---|
| Earth electrode for installations protected by RCDs of sensitivity 100mA | 100 ohm |
| Lightning arrestor earth electrode | 10 ohm |

# CHAPTER 8

# INSPECTION AND TESTING OF ELECTRICAL WIRING

## 8.1 Legal Requirements

i) Sub-rule 12(1) of The Electricity Rules 1999 state that "any electrical wiring in an installation which receives single phase supply from a public installation licensee shall be carried out by a Wireman Second Grade or First Grade, and upon completion of the installation, the Electrical Installation Contractor shall issue a Supervision and Completion/ Test Certificate".

ii) Sub-rule 12(2) of The Electricity Rules, 1999 state that "any electrical wiring in an installation which receives three phase supply from a public installation licensee shall be carried out by a Wireman First Grade, and upon completion of the installation, the Electrical Installation Contractor shall issue a Supervision and Completion/ Test Certificate".

iii) Sub-rule 13(1) and 13(2) of The Electricity Rules 1999 state that "upon completion of wiring or rewiring of an installation or extension to an existing installation in Sub-rule 12(1) and 12(2), the installation shall be tested by an Electrical Installation Contractor endorsed with Authorised to Test and he shall issue a Supervision and Completion/ Test Certificate for the installation".

iv) Sub-rule 14(1) of The Electricity Rules, 1999 states that "the Supervision and Completion/ Test Certificate in Rules 12 and 13 shall be in such forms as may be prescribed by the Director of Electricity Supply".

## 8.2 Testing

On completion of a wiring installation, a number of tests on the installation have to be conducted to ascertain that the wiring circuits and connected appliances are safe for use. Prior to carrying out the tests, an inspection has to be done. The results of the inspection/supervision and test have to be presented in Schedule of Inspection and Testing of LV Wirings of Installation (Form IT-1) (as in **Appendix V)** and in Supervision and Completion/Test Certificate (Form EIU/ST/1.0) (as in **Appendix VI).**

To have the test certification as in Supervision and Completion/ Test Certificate Form, the following tests shall be conducted:

i) Continuity Test;

ii) Insulation Resistance Test;

iii) Polarity Test;

iv) Earth Electrode Resistance test; and

v) Residual Current Device Test.

### 8.2.1 Continuity Test

There are 3 main types of continuity tests for the final circuits:

i) Protection Conductor Continuity Test.

ii) Final Ring Circuit Conductor Continuity Test.

iii) Live and Neutral Conductor Continuity Test.

**a) Protection Conductor Continuity Test**

- To ascertain that all protection conductors are connected in the correct and effective manner.
- Test equipment – Multimeter (Ohm range) or Ohm meter.
- Test Method:
  - Ensure that the main switch, RCD and MCB are open circuited (switched off) and all loads are disconnected;
  - Connected the test leads as in the Figure 8.1;
  - The meter reading shall be less than 1 ohm.

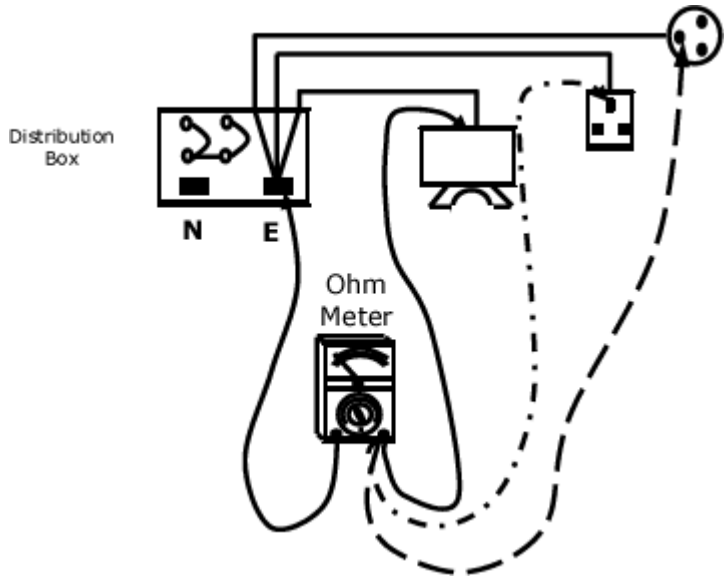


Figure 8.1 – Protection Conductor Continuity Test

**b) Final Ring Circuit Conductor Continuity Test**

- To ensure that all conductors around the ring circuit have continuity;
- Test Equipment – Multimeter (Ohm range) or Ohm Meter
- Test Method:
  - Disconnect both the supply source live conductors from the MCB, the neutral conductor from the neutral terminals and the earth conductor from the earth terminal in the distribution fuse box;
  - Connect the test leads as in the Figure 8.2 (E-E);
  - Repeat the procedure for (L-L) and (N-N);
  - The meter reading value shall be less than 1 ohm.

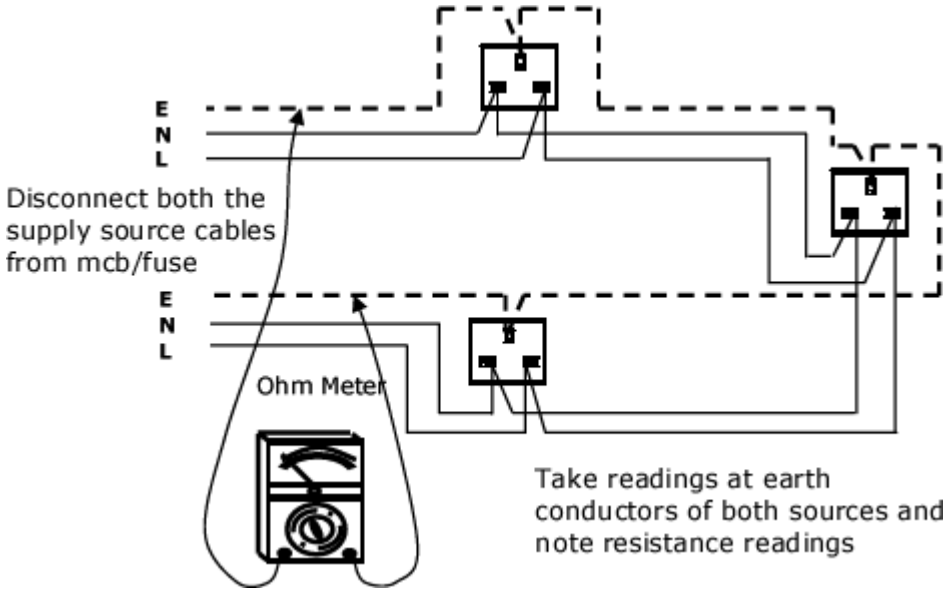


Figure 8.2 - Final Ring Circuit Conductor Continuity Test

### c) Live and Neutral Conductor Continuity Test

- To ensure that each conductor in the circuit has continuity;
- Test Equipment – Multimeter (Ohm range) or Ohm Meter
- Test Method:
  - Switch off the Main switch, RCD and MCB;
  - Disconnect all loads;
  - Switch on all switches in the circuit;
  - Disconnect the fuses/final circuit breakers and close the circuit;
  - Carry out the test as shown in Figure 8.3;
  - The meter reading value shall be less than 1 ohm.

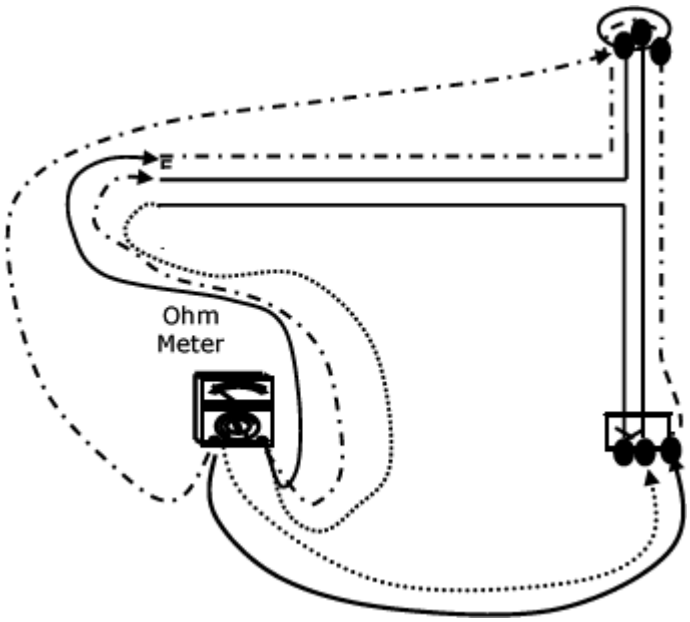


Figure 8.3 - Live and Neutral Conductor Continuity Test

### 8.2.2 Insulation Resistance Test

i) Ensure that there is no leakage current between phase conductors, phase and neutral conductors and phase conductor and earth.

ii) Test the strength of the cable insulation.

iii) Test Equipment – Insulation Resistance Tester operating voltage is 250 $V_{D\ C}$ or 500 $V_{DC.}$

iv) Test Method:

- Switch off main switch;
- Disconnect all loads;
- Switch on all circuit control switches;
- Carry out test as in the Table below;
- Meter reading value shall be less than 1 Megaohm.

| **Test At Single Phase Consumer Unit** | **Test At Three Phase Consumer Unit** | | **Test At Final Lighting Circuit** | **Test At 13A Socket Outlet Circuit – Radial Circuit and Ring Circuit** |
|---|---|---|---|---|
| L & N | L1 & L2 | L3 & N | L & N | L & N |
| L & E | L2 & L3 | L2 & E | L & E | L & E |
| N & E | L1 & L3 | L3 & E | N & E | N & E |
| | L1 & N | N & E | | |
| | L2 & N | | | |

Minimum values for insulation resistance are as in the table below.

| **Nominal Circuit Voltage** (Volts) | **A.C. Test Voltage** (Volts) | **Minimum Insulation Resistance** (MegaOhms) |
|---|---|---|
| Extremely low voltage circuit receiving supply from an isolating transformer / SELV | 250 | 0.25 |
| Up to and including 500V except the above cases | 500 | 0.5 |
| Exceeding 500V | 1 000 | 1.0 |

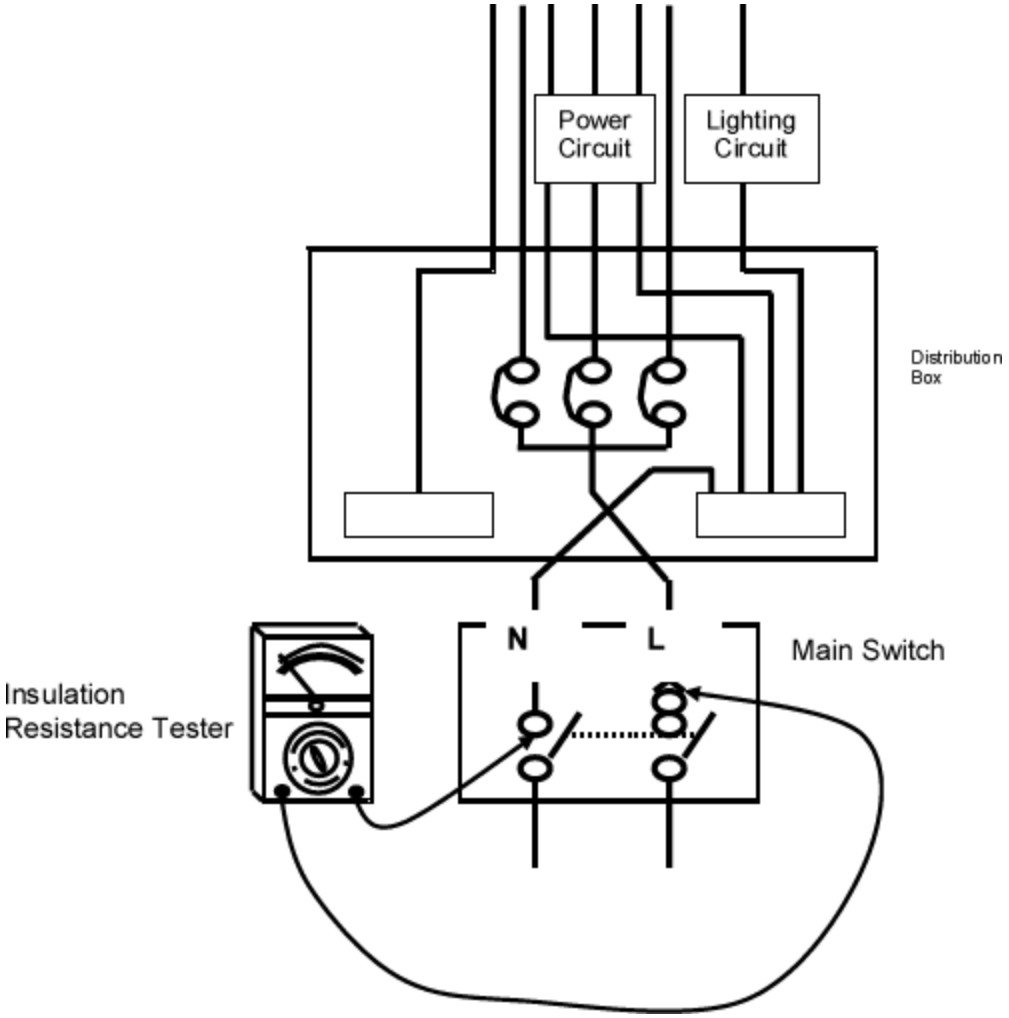


Figure 8.4 – Insulation Resistance Test

### 8.2.3 Polarity Test

i) Ensure that each fuse or single pole control and protection device is connected only in the phase conductor.

ii) Intermediate contact of Edison screw lamp holder is connected to the phase conductor.

iii) Ensure that phase, neutral and earth conductors at socket outlets are connected at the correct terminals.

iv) Test Equipment – Multimeter (Ohm range) or Ohm meter.

v) Test Method:

- Switch off Main switch;
- Disconnect all loads
- Switch on all circuit control switches;
- Carry out test as in Figure 8.5;
- Test switches and single phase control devices at the phase conductors.
- Test socket outlet connection sources.
- Test Edison screw lamp holder connections.
- Meter reading value shall be less than 1 ohm.

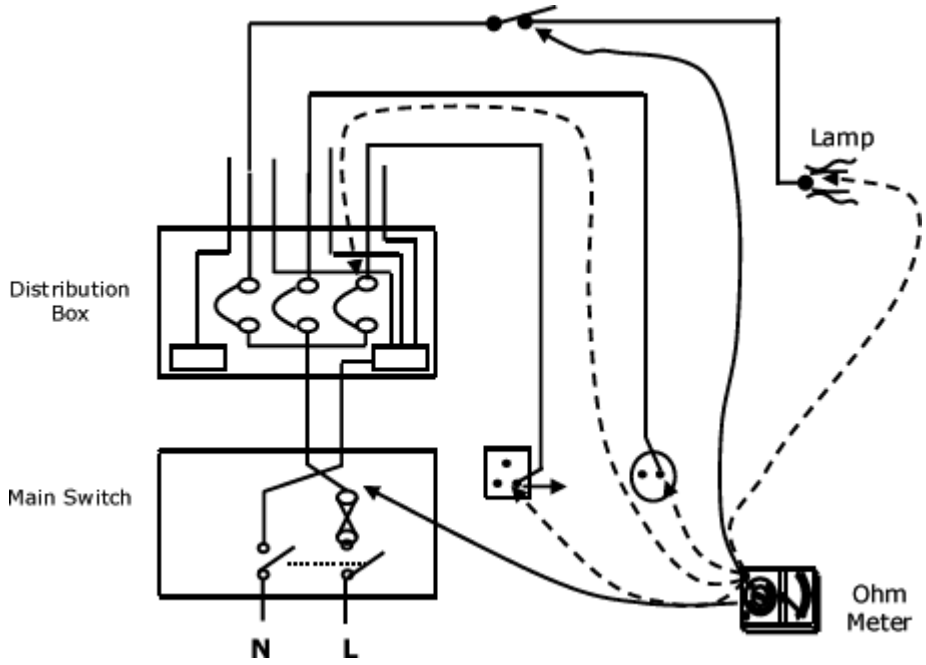


Figure 8.5 – Polarity Test

### 8.2.4 Earth Electrode Resistance Test

i) To test the earth electrode resistance.

ii) To ascertain the suitability of the location of the electrode.

iii) To ensure that the electrode is not buried within the resistance area of another electrode.

iv) Test equipment – Earth Resistance Tester.

v) Test method: -

- Terminal 'E' is connected to the electrode to be tested (green conductor)
- Terminal 'P' is connected to the potential spike (yellow conductor) at a distance of 10 meters from the earth electrode.
- Terminal 'C' is connected to the current spike (red conductor) at a distance of 20 meters from the earth electrode.

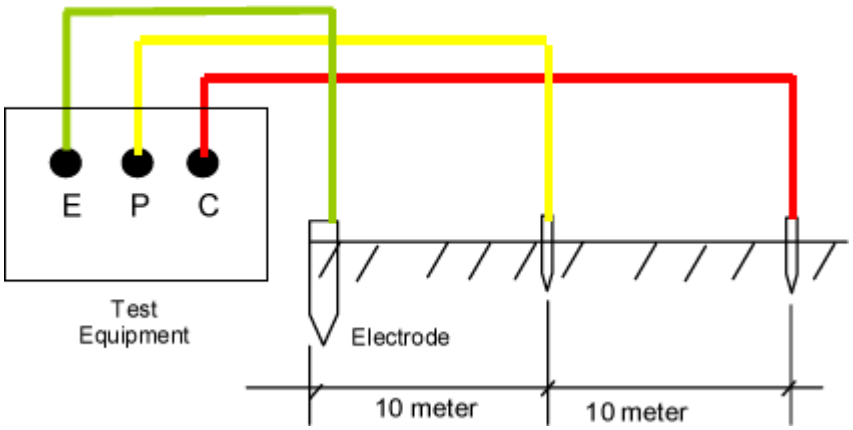


Figure 8.6 – Earth Electrode Resistance Measurement

**Earth Electrode Resistance Measurement Method (Figure 8.6)**

This test must be repeated at least three times, to ensure that the reading is not affected by interacting earthing regions.

i) Record the first reading ($Z_1$)
   Example: $Z_1 = 10\ \Omega$

ii) Move the voltage spike to a distance of 6 meters from the original position. Record the second reading ($Z_2$)
   Example: $Z_2 = 10\ \Omega$

iii) Move the voltage spike to a distance of 6 meters from the original position. Record the third reading ($Z_3$)
   Example: $Z_3 = 10\ \Omega$

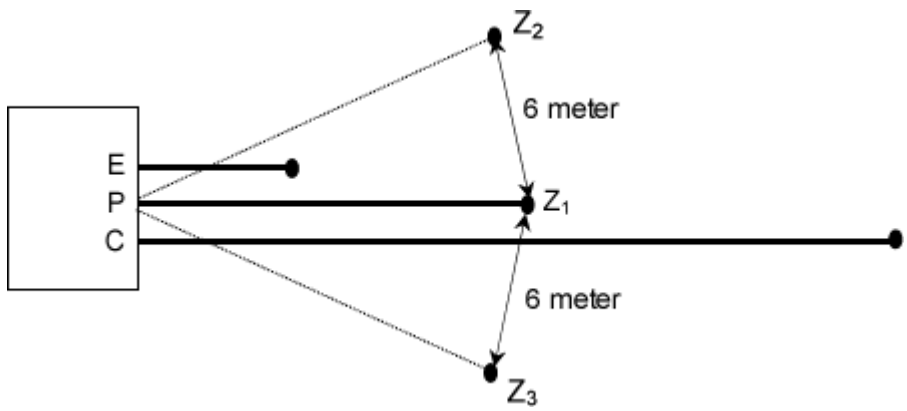


Figure 8.7: Earth Electrode Resistance Measurement

**Result:**

From the three resistance values, obtain the average value of the tested earth electrode resistance.

$$Z = \frac{Z_1 + Z_2 + Z_3}{3}$$

$$= \frac{10 + 10 + 10}{3} = 10\ \Omega$$

### 8.2.5 Residual Current Device Test

i) Ensure that the residual current device (RCD) trips within the set time on the occurrence of current leakage to earth.

ii) Test Equipment – RCD Tester/ RCCB Tester

iii) Test Method 1

- Use the Trip Test Button
- Press the trip button found on the RCD to determine if it trips or otherwise. This test would not be able to determine the sensitivity of the RCD nor the time taken for it to trip.

iv) Test Method 2

- Use a RCD Tester

  This equipment is equipped with a 13A plug which can be connected to a 13A socket outlet. Select the RCD sensitivity to be the same as the sensitivity of the RCD to be tested, to determine if the RCD can trip. The time to trip shall not exceed 40 millisecond.

- Test method

  a) Position the selection switch in accordance with the sensitivity of the RCD used. Example: 100 mA / 0.1 A

  b) Position the operations switch to 'No Trip' (½ Rated mA = 50%), connect the 3-pin plug to the 13A socket outlet.

  c) Switch on the 13A socket outlet – ensure that the P-N and P-E lights light up. This shows that the polarity is correct. (Note: if both the lights as above do not light up, the test cannot be continued).

  d) Press the test button – the reading shows less than 200 millisecond and simultaneously the 'test' light lights up and the P-N and P-E lights do not light up. At that instant the RCD will not trip.

  e) Move the selection switch to 180° (+ve wave) – repeat steps (d) and (e).

  f) Move the operations switch to 'Trip' (Rated mA = 100%).

  g) Press the test button – RCD will trip and the indicated reading shall not exceed 200 millisecond.

  h) Move the selection switch to 0° (-ve wave).

  i) Press the test button – RCD will trip and the indicated reading shall not exceed 200 millisecond.

  j) The above test is repeated until a near correct reading is obtained.

  k) Record the test results.

l) Change the operations switch to ‘Fast Trip’ and press the test button – RCD will trip within a time not exceeding 40 millisecond.

m) Repeat a number of times at $0_o$ or $180^o$.

v) Test results must be as shown in the following table:-

| No | Operations Switch Position | Operating Time | Result |
|---|---|---|---|
| 1 | No T r ip | > 200 ms | No Trip |
| 2 | Trip | < 200 ms | Trip |
| 3 | Fast Trip | < 40 ms | Trip |

**APPENDIX I**

# SAFETY REQUIREMENTS FOR ELECTRICAL WIRING WORKS IN RESIDENTIAL BUILDINGS

## 1.1 Safety Requirements

Safety requirements for electrical wiring works have to be followed to eliminate any accidents which can result in physical damage or loss of life or property. Failure to meet the safety requirements may result in workers, consumers or the public being inflicted with electrical shocks.

In addition to this, safety steps will also encourage workers or electricity consumers who are disciplined and who always give importance to safety.

## 1.2 Safety Steps

Safety requirements have to be followed whenever electrical works are undertaken in a residential building.

### i) Personal Safety

a) Use suitable personal protection equipment as needed such as safety shoes, gloves, safety helmet, etc. when at the work place.

b) Use safety clothing suitable for the work to be undertaken.

c) Do not wear jewellery or decorative items such as rings, watches, chains, etc. while carrying out electrical works.

### ii) Safety at the Work Place

a) Acquire knowledge about the dangers of electrical works that is to be undertaken and how to deal with those dangers.

b) Always adhere to the safety requirements which have been set for the work place.

c) Ensure that the electricity supply is switched off before carrying out the works.

d) Acquire the needed knowledge and practice a cautious and calm attitude while working, ensure cleanliness in and around the workplace, do not smoke and always coordinate work with fellow workers.

e) While working at elevated places, the worker should always use suitable equipment such as wooden or aluminium ladders, iron scaffoldings or platforms, safety belts or other equipment needed to ensure that the work can be undertaken safely.

f) Use electrical equipment which is operational and safe to be used and ensure that the supply for it is being supplied through a residual current device (RCD) with a sensitivity of 30 mA.

g) Ensure that exposed temporary supply electrical cables have mechanical protection.

h) If inflammable or corrosive material is present, necessary safety steps have to be undertaken as required by the relevant safety requirements.

## 1.3 Dangers of Electrical Shocks

i) **Electrical Shock** Electrical shocks can occur due to direct or indirect contact.

**a) Direct Contact:**

Direct contact occurs when the worker or consumer receives an electrical shock on touching directly a live conductor or cable.

**b) Indirect Contact:**

Here the electric shock occurs due to contact with a part which is connected to the electrical installation and not to a direct contact with a live cable or conductor, possibly due to damages in the appliance or insulation, resulting in leakages of current.

**ii) Why Electric Shocks Occur**

**a) Unsafe Work Method or Action**

- **Undertaking Electrical Work Without Disconnecting the Supply** Maintenance or circuit testing work done without disconnecting the supply will have a high possibility of electrical shocks occurring.

- **Not Following Safe Work Procedures**
  To eliminate the occurrence of electrical shocks, each worker has to always follow safe work procedures which are set by regulations and standards.

**b) Defects in the Electrical System**

- **Leakage Current**
  Leakage currents or earth leakage currents can result in the metallic frames becoming live and energised. This can give rise to the danger of electrical shock to the worker, consumer or the public if they hold or come into contact with the metallic frame.

- **Exposed Conductor or Disconnected Cable**
  Exposed conductors or cables which are broken and are alive (energised) can result in electrical shock when touched. The supply source must be immediately isolated or switched off and a report must be made to the responsible entity.

## 1.4 First Aid and Basic Pulmonary Resuscitation

**i) First Aid**

First aid is the initial assistance given to a person who has met with an accident, is sick or is injured to prevent the condition of the victim from becoming more serious while awaiting the arrival of the para medics (ambulance) or before being brought to the hospital.

**ii) Pulmonary Resuscitation**

Pulmonary resuscitation has to be undertaken to assist the victim who has breathing difficulties as a result of being drowned, receiving an electrical shock, etc. Pulmonary resuscitation has to be carried out in accordance to the correct method as stated in the first aid manuals issued by accredited first aid bodies.

**iii) First Aid Box**

A first aid box has to be provided by the building owner, construction site supervisor or brought personally by the worker under the supervision of the responsible person.

## 1.5 Training Programme

The management shall conduct periodic training programmes for the workers with regards to work safety on aspects including the following: -

i) Dangers of electrical work being undertaken and how to control those dangers;

ii) The safety regulations set for the work place; and

iii) First aid procedures.

## 1.6 Fire Prevention

Fire Extinguisher

A suitable, functioning fire extinguisher to control fires has to be made available at the work place at all times.

## 1.7 Competent Person

The Electricity Rules, 1999 require that all electrical work has to be undertaken by or under the direct supervision of a competent person registered with the Electrical Inspectorate Unit. Besides that, the electrical installation contractor undertaking the electrical work has also to be registered with the Electrical Inspectorate Unit. The installation owner thus has to ensure that the appointed electrical installation contractor is registered with the Electrical Inspectorate Unit and that the registration is still valid.

# TABLE 4D1A
## Single-core PVC-insulated cables, non-armoured, with or without sheath
## (COPPER CONDUCTORS)

**BS 6004**

**BS 6231** **Ambient temperature: 30 °C**

**CURRENT-CARRYING CAPACITY (amperes):** **BS 6346** **Conductor operating temperature: 70°C**

| Conductor cross-sectional area | Reference Method 4 (Enclosed in conduit in thermally insulating wall etc.) | | Reference Method 3 (enclosed in conduit on a wall or in trunking etc.) | | Reference Method 1 (clipped direct) | | Reference Method 11 (on a perforated cable tray horizontal or vertical) | | Reference Method 12 (free air) | | |
|---|---|---|---|---|---|---|---|---|---|---|---|
| | | | | | | | | | Horizontal flat spaced | Vertical flat spaced | Trefoil |
| | 2 cables, single-phase a.c or d.c | 3 or 4 cables, three-phase a.c | 2 cables, single-phase a.c or d.c | 3 or 4 cables, three-phase a.c | 2 cables, single-phase a.c or d.c flat and touching | 3 or 4 cables, three-phase a.c flat and touching or trefoil | 2 cables, single-phase a.c or d.c flat and touching | 3 or 4 cables, three-phase a.c flat and touching or trefoil | 2 cables, single-phase a.c or d.c or 3 cables three-phase a.c | 2 cables, single-phase a.c or d.c or 3 cables three-phase a.c | 3 cabes trefoi l, three - phase a.c |
| 1 | 2 | 3 | 4 | 5 | 6 | 7 | 8 | 9 | 10 | 11 | 12 |
| (mm²) | (A) | (A) | (A) | (A) | (A) | (A) | (A) | (A) | (A) | (A) | (A) |
| **1** | **11** | **10.5** | **13.5** | **12** | **15.5** | **14** | **-** | **-** | **-** | **-** | **-** |
| **1.5** | **14.5** | **13.5** | **17.5** | **15.5** | **20** | **18** | **-** | **-** | **-** | **-** | **-** |
| **2.5** | **19.5** | **18** | **24** | **21** | **27** | **25** | **-** | **-** | **-** | **-** | **-** |
| **4** | **26** | **24** | **32** | **28** | **37** | **33** | **-** | **-** | **-** | **-** | **-** |
| **6** | **34** | **31** | **41** | **36** | **47** | **43** | **-** | **-** | **-** | **-** | **-** |
| **10** | **46** | **42** | **57** | **50** | **65** | **59** | **-** | **-** | **-** | **-** | **-** |
| **16** | **61** | **56** | **76** | **68** | **87** | **79** | **-** | **-** | **-** | **-** | **-** |
| **25** | **80** | **73** | **101** | **89** | **114** | **104** | **126** | **112** | **146** | **130** | **110** |
| **35** | **99** | **89** | **125** | **110** | **141** | **129** | **156** | **141** | **181** | **162** | **137** |
| **50** | **119** | **108** | **151** | **134** | **182** | **167** | **191** | **172** | **219** | **197** | **167** |
| **70** | **151** | **136** | **192** | **171** | **234** | **214** | **246** | **223** | **281** | **254** | **216** |
| **95** | **182** | **164** | **232** | **207** | **284** | **261** | **300** | **273** | **341** | **311** | **264** |

## TABLE 4D1B

**VOLTAGE DROP (per ampere per metre):** **Conductor operating temperature: 70°C**

| Conductor cross-sectional area | 2 cables d.c | 2 cables, single-phase a.c | | | | | | | | | 3 or 4 cables, three-phase a.c | | | | | | | | | | | |
|---|---|---|---|---|---|---|---|---|---|---|---|---|---|---|---|---|---|---|---|---|---|---|
| | | Reference Method 3 & 4 (Enclosed in conduit etc. in or on a wall) | | | Reference Method 1 & 11 (clipped direct or on trays, touching) | | | Reference Method 12 (spaced*) | | | Reference Method 3 & 4 (Enclosed in conduit etc. in or on a wall) | | | Reference Method 1, 11 &12 (in trefoil) | | | Reference Method 1 & 11 (flat and touching) | | | Reference Method 12 (spaced*) | | |
| 1 | 2 | 3 | | | 4 | | | 5 | | | 6 | | | 7 | | | 8 | | | 9 | | |
| (mm²) | (mV/A/m) | (mV/A/m) | | | (mV/A/m) | | | (mV/A/m) | | | (mV/A/m) | | | (mV/A/m) | | | (mV/A/m) | | | (mV/A/m) | | |
| 1 | 44 | 44 | | | 44 | | | 44 | | | 38 | | | 38 | | | 38 | | | 38 | | |
| 1.5 | 29 | 29 | | | 29 | | | 29 | | | 25 | | | 25 | | | 25 | | | 25 | | |
| 2.5 | 18 | 18 | | | 18 | | | 18 | | | 15 | | | 15 | | | 15 | | | 15 | | |
| 4 | 11 | 11 | | | 11 | | | 11 | | | 9.5 | | | 9.5 | | | 9.5 | | | 9.5 | | |
| 6 | 7.3 | 7.3 | | | 7.3 | | | 7.3 | | | 6.4 | | | 6.4 | | | 6.4 | | | 6.4 | | |
| 10 | 4.4 | 4.4 | | | 4.4 | | | 4.4 | | | 3.8 | | | 3.8 | | | 3.8 | | | 3.8 | | |
| 16 | 2.8 | 2.8 | | | 2.8 | | | 2.8 | | | 2.4 | | | 2.4 | | | 2.4 | | | 2.4 | | |
| | | r | x | z | r | x | z | r | x | z | r | x | z | r | x | z | r | x | z | r | x | z |
| 25 | 1.75 | 1.80 | 0.33 | 1.80 | 1.75 | 0.20 | 1.75 | 1.75 | 0.29 | 1.80 | 1.50 | 0.29 | 1.55 | 1.50 | 0.175 | 1.50 | 1.50 | 0.25 | 1.55 | 1.50 | 0.32 | 1.55 |
| 35 | 1.25 | 1.30 | 0.31 | 1.30 | 1.25 | 0.195 | 1.25 | 1.25 | 0.28 | 1.30 | 1.10 | 0.27 | 1.10 | 1.10 | 0.170 | 1.10 | 1.10 | 0.24 | 1.10 | 1.10 | 0.32 | 1.15 |
| 50 | 0.93 | 0.95 | 0.30 | 1.00 | 0.93 | 0.190 | 0.95 | 0.93 | 0.28 | 0.97 | 0.81 | 0.26 | 0.85 | 0.80 | 0.165 | 0.82 | 0.80 | 0.24 | 0.84 | 0.80 | 0.32 | 0.86 |
| 70 | 0.63 | 0.65 | 0.29 | 0.72 | 0.63 | 0.185 | 0.66 | 0.63 | 0.27 | 0.69 | 0.56 | 0.25 | 0.61 | 0.55 | 0.160 | 0.57 | 0.55 | 0.24 | 0.60 | 0.55 | 0.31 | 0.63 |
| 95 | 0.46 | 0.49 | 0.28 | 0.56 | 0.47 | 0.180 | 0.50 | 0.47 | 0.27 | 0.54 | 0.42 | 0.24 | 0.48 | 0.41 | 0.155 | 0.43 | 0.41 | 0.23 | 0.47 | 0.40 | 0.31 | 0.51 |

Note : * Spacing larger than those specified in Method 12 (see Table 4A1) will result in larger voltage drop

## CABLE VOLTAGE DROP ($V_d$) CALCULATIONS

**Example:**

Calculate the voltage drop for an installation which is supplied at 240V by a single core 16mm$^2$ PVC insulated cable in conduit with a length of 23 m and the current flow to the load of 33 A.

Solution:

Find the value of the voltage drop for the size of the cable by using the third column in Table 4D1B.

Cable size = 16mm$^2$

From Table 4D1B,

Voltage drop = 2.8 mV/A/m

$$V_d = \frac{M_v \times I_b \times L}{1000}$$

$$V_d = \frac{2.8 \times 33 \times 23}{1000}$$

$$= 2.125 \text{ Volt}$$

The voltage drop in the cable is 2.125 Volt when a cable of 16 mm2 is used. As this does not exceed the 9.6 Volt as specified, the most suitable cable size to be used is 16 mm$^2$.

## Schedule of Inspection and Testing of LV Wirings of Installation (Form IT-1)

# SCHEDULE OF INSPECTION AND TESTING OF LV WIRINGS OF INSTALLATION

## A) INSPECTION DURING SUPERVISION AND COMPLETION OF INSTALLATION

1. ☐ Connection of conductors
2. ☐ Identification of conductors
3. ☐ Routing of cables in safe zones or within mechanical protection
4. ☐ Selection of conductors for current and voltage drop
5. ☐ Connection of single pole devices for protection or switching in phase conductors only
6. ☐ Correct connection of socket outlets and lamp holders
7. ☐ Presence of barriers and protection against thermal effects
8. Method of protection against direct contact
   - ☐ Insulation of live parts
   - ☐ Barrier or enclosure
   - ☐ Placing out of reach
   - ☐ Obstacles
9. Method of protection against indirect contact
   - ☐ Presence of protective conductors
   - ☐ Presence of earthing conductors
   - ☐ Presence of main equipotential bonding conductors
   - ☐ Earthing arrangements for combined protective and functional earths
   - ☐ Presence of main equipotential bonding conductors
   - ☐ Use of Class II equipment or equivalent insulation
   - ☐ Non conducting location Earth free local equipotential bonding
   - ☐ Electrical separation
10. ☐ Prevention of mutual detrimental influence
11. ☐ Presence of appropriate devices for isolation and switching
12. ☐ Presence of undervoltage protective devices where appropriate
13. ☐ Choice and setting of protective and monitoring services (for protection against indirect contact and/or against overcurrent)
14. ☐ Labelling of fuses, switches and terminals
15. ☐ Selection of equipment and protective measures appropriate to external influences
16. ☐ Adequacy of access to switchgear and equipment
17. ☐ Presence of danger notices and other warning notices
18. ☐ Presence of diagrams instructions and necessary information
19. ☐ Erection methods

√ ***To indicate satisfaction with inspection***

**Observation and Recommendations during inspection:**

……

……

**Signature** : _____ **Company Chop:**

**Holder of EIC Certificate** : _____

**Date** : _____

## B) TESTING – NOTES ON TEST RESULT SCHEDULE

1 Type of supply system is ascertained from the supply authority or by inspection.

6 Prospective short circuit current is the greater of the short-circuit current and earth fault current.

7 Ze, the external impedance measured at the origin of the installation with the main bonding disconnected.

13 The breaking capacity of the device is noted.

**Test shall be carried out in the sequence below and results recorded on the test result schedule.**

17 Continuity

During the continuity testing the following polarity checks are carried out, that:

a) every fuse and single pole control and protective device is connected in the phase conductor only.
b) centre-contact bayonet and Edison screw lamp holders have the outer contact or screwed contacts connected to the neutral conductor.
c) Wiring is correctly connected to socket outlets.

Indicate compliance in polarity under column 25.

Continuity of protective conductors - Every protective conductor including bonding conductors shall be tested to verify it is sound and correctly connected.

Continuity of final circuit conductors - The sum of the resistance of the of the phase conductor (R1) and the protective conductor (R2) i.e. R1 + R2, is to be inserted in column 17. This may be use, after temperature correction, by adding to Ze, to determine Zs.

18 Where continuity test involve measuring protective conductor at various points to the main earthing terminal, the maximum value of R2.

Where the alternative method of Regulation 413-02-12 (IEE Wiring Regulations) is used for shock protection, the resistance of the circuit protective conductor R2 is measured and recorded in column 18.

19 A test shall be made to verify the continuity of each conductor including the protective conductor of every ring circuit, and a satisfactory test indicated by a tick

20 - 24 Insulation resistance

Equipment such as electronic devices shall, where necessary, be disconnected from the installation to avoid damage during testing. Where required, such equipment shall be tested separately.

The insulation resistance required for the main switchboard, and each distribution circuit tested separately with all final circuits connected, but current using equipment disconnected, shall comply with the values in IEE Wiring Regulations.

The minimum value for the insulation resistance is 1 MΩ measured with 500 V dc test voltage.

**All the preceding tests should be carried out before the installation is energized.**

25 Polarity – Following the energising of the installation, polarity must be checked before further testing.

26 Earth fault loop impedance, Zs

This may be determined either by direct measurement at the further point of a live circuit OR by adding (R1 + R2) of column 17 to Ze (see note 7).

i.e. Zs = Ze + (R1 + R2). In general, the earth fault loop impedance shall not exceed 100 Ω.

27- 31 Residual Current Devices (RCD) Testing

The operation of main and supplementary RCDs shall be tested by simulating a fault condition, independent of any test facility in the device. For 100mA main RCD tested at 50% rated tripping current, no tripping for 2s and at 100% rated tripping current, tripping shall be within 200 ms. For 30 mA

supplementary RCD, tripping time shall be within 40ms tested at five times the rated tripping current (150 mA).

32 Earth electrode resistance

The earth electrode resistance of the installation must be measured and the value recorded.

# TEST RESULT SCHEDULE

Address / Lot No. of Installation: _____

_____

_____

_____Postcode: _____

1. Type of Supply System: TT / Others _____
2. Nominal Voltage of Installation:_____Volts
3. Main Earthing Conductor size : _____$mm^2$
4. Sub-mains Earthing Conductor :_____$mm^2$
5. Main Bonding check : Yes / No * , Size:_____$mm^2$
6. Prospective Short Circuit Current:_____kA
7. $Z_e$ at origin :_____Ω (ohms)

| Circuit / Device No. (Indicate on the drawings the circuit/device no.) | Remarks on workmanship, use of approved materials / Devices | No. of outlets / points | Overcurrent Devices | | | Wiring | | | Test Results | | | | | | | | | | | | | | | | | | Remarks |
|---|---|---|---|---|---|---|---|---|---|---|---|---|---|---|---|---|---|---|---|---|---|---|---|---|---|---|---|
| | | | | | | | | | Continuity | | | Insulation Resistance for Circuits (MΩ) | | | | | | | Main RCD | | | | Supple-mentary RCD | | | |
| | | | | | | | | | | | | | | | | | | | | | Trip Time (ms) | | | | | | |
| | | | Type | Rating (A) | Breaking Capacity (kA) | Installation methods | Size ($mm^2$) | CPC ($mm^2$) | $L_1 + L_2$ (Ω) | $L_2$ (Ω) | Ring Final | L1,L2,L3,N – E / LN | L1,L2,L3E – N / LE | L1 – L2 | L2 – L3 | L3 – L1 | Polarity Test | Earth Loop Impedance , $Z_s$ (Ω) – Typically <100Ω | 50% trip current (no tripping for > 2 s) | 100 % (trip within 200 ms) | At 0° | At 180° | 5 x rated tripping current ( Trip within 40 ms) | Earth Electrode | Phase Sequence Test | |
| 8 | 9 | 10 | 11 | 12 | 13 | 14 | 15 | 16 | 17 | 18 | 19 | 20 | 21 | 22 | 23 | 24 | 25 | 26 | 27 | 28 | 29 | 30 | 31 | 32 | 33 | 34 |
| | | | | | | | | | | | | | | | | | | | | | | | | | | |
| | | | | | | | | | | | | | | | | | | | | | | | | | | |
| | | | | | | | | | | | | | | | | | | | | | | | | | | |
| | | | | | | | | | | | | | | | | | | | | | | | | | | |
| | | | | | | | | | | | | | | | | | | | | | | | | | | |
| | | | | | | | | | | | | | | | | | | | | | | | | | | |
| | | | | | | | | | | | | | | | | | | | | | | | | | | |
| | | | | | | | | | | | | | | | | | | | | | | | | | | |

**Deviations from IEE Wiring Regulations and special notes:**

(*Please use separate sheet(s) if insufficient space)*

**Company chop:**

Signature of Holder :_____

Holder of Electrical Installation Contractor Certificate : _____

*Note: IEC 60445 colour code vs BS 7671 colour code : L1 = Red (R), L2 = Yellow(Y), L3 = Blue(B)*

**Supervision and Completion/ Test Certificate (Form EIU/ST/1.0)**

# SUPERVISION AND COMPLETION / TEST CERTIFICATE

**(LOW VOLTAGE ELECTRICAL WIRING)**

**THE ELECTRICITY RULES, 1999**

**RULES 12 AND 13**

Reference Number:

## PART 1: OWNER / MANAGEMENT OF INSTALLATION

To:

_____

_____ Postcode: _____

*(Name & Address of owner / management of installation))*

## PART 2: LOCATION AND DETAILS OF INSTALLATION

Client : _____

Address/ Lot No. of Installation : _____

Postcode:_____

Type of Installation:_____ New Installation* / Alteration* /Extension* of Existing Installation

*(eg domestic house, shophouse, apartment, etc)* First Test* / Re-Test*

## PART 3: SCHEDULE OF DRAWINGS FOR SUPERVISION AND COMPLETION

The electrical work listed in these drawings has been supervised and completed in accordance with The Electricity

| No | Drawing | Drawing |
|---|---|---|
| 1. | | |
| 2. | | |
| 3. | | |
| 4. | | |
| 5. | | |

*(Please use separate sheet(s) if insufficient*

## PART 4: SUPERVISION AND COMPLETION

I, being the person responsible (as indicated by my signature below) for the supervision and completion of the electrical work at the above installation in Part 2, particulars of which are described in the Schedule of Drawings in Part 3, **CERTIFY** that the said work for which I have been responsible, is to the best of my knowledge and belief, in accordance with The Electricity Rules, 1999.

The extent of liability of the signatory is limited to the electrical installation described above in Part 2 as the subject of this Certificate. For the supervision and completion of the electrical installation:

Holder of **Electrical Installation Contractor (EIC)** Certificate : _____

*(name in BLOCK letters)*

For and on behalf of : _____ **Company Chop**:

*(name of Business)*

Address : _____

_____ Postcode: _____

Certificate of Registration No:_____Expiry Date: _____

## PART 5: SCHEDULE OF DRAWINGS FOR TESTING

The electrical work listed in these drawings has been tested in accordance with The Electricity

| No | Drawing | Drawing |
|---|---|---|
| 1. | | |
| 2. | | |
| 3. | | |
| 4. | | |
| 5. | | |

*(Please use separate sheet(s) if insufficient*

** Delete whichever is not applicable*

**PART 6: SCHEDULE OF TEST RESULTS**

1.

2.

3.

4.

**PART 7: TEST**

*(Please use separate sheet(s) if insufficient space)*

I, being the person responsible (as indicated by my signature below) for the testing of the installation at the above installation in Part 2, particulars of which are described in the Schedule of Drawings in Part 5 and Schedule of Test Results in Part 6 **CERTIFY** that the above installation which I have been responsible, is to the best of my knowledge and belief in accordance with The Electricity Rules, 1999, and that the above installation is ready and safe to receive energy from or be given energy by the licensee or supply authority, as the case may be. The extent of liability of the signatory is limited to the installation described above in Part 2 as the subject of this Certificate.

For the test of the installation:

Holder of **Electrical Installation Contractor (EIC)** Certificate : _____
*(name in BLOCK letters)*

For and on behalf of : _____ **Company Chop**:
*(name of Business)*

Address : _____

_____ Postcode: _____

Certificate of Registration No:_____Expiry Date: _____

Signature of Holder:_____ Date: _____

**PART 8: ACCEPTANCE TO SUPPLY**

The above installation in Part 2 is hereby accepted for supply of electrical energy.

Signature:_____Name : _____
*(Authorised by Licensee or supply authority to sign)*

On behalf of : _____ Date:____/_____/____
*(Name of Licensee or supply authority)* *dd m yyyy*

**NOTES:**

2. The Supervision and Completion part of this Certificate required by Rule 12 of The Electricity Rules, 1999, shall be made out and signed by the **holder of the Electrical Installation Contractor (EIC) Certificate** in respect of the supervision and completion of the electrical work.
3. The Testing part of this Certificate required by Rule 13 of The Electricity Rules, 1999, shall be made out and signed by the **holder of the Electrical Installation Contractor Certificate authorized to carry out testing** in respect of the test of the installation. The holder of the Electrical Installation Contractor carrying out the test may be the same person carrying out the supervision and completion of the installation.
4. This Certificate will indicate the responsibility for supervision and completion, and testing of the electrical work, whether in relation to a new installation or further work on an existing installation.
5. When making out and signing a certificate on behalf of a company or other business entity, an individual shall state for whomhe is acting.
6. Additional certificates may be required as clarification for larger or complicated electrical work.
7. The signature(s) appended is (are) that of the person(s) authorized by the company executing the work of supervision and completion, and testing of the electrical work.
8. The page numbers of each sheet should be indicated together with the total number of the sheets involved.
9. Each drawing listed in the Schedule of Drawings for Supervision and Completion, and for Testing shall indicate clearly the name, signature and certificate number of the contractor or competent person preparing it in accordance with Rule 64 of The Electricity Rules, 1999.
10. The owner or management of the electrical installation shall submit this Certificate to the licensee or supply authority in Sarawak, as the case may be, in order to receive energy from the licensee or supply authority.
11. On receipt of the said Certificate, the licensee or supply authority shall henceforth supply energy as requested by the owner or management of the installation.

12. This Certificate shall be transferred to the new owner or management where there is change in ownership or management of theproperty.

**SYAMBOLS**

| No. | Symbol | Details |
|---|---|---|
| 1. | 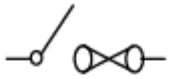 | Switch fuse |
| 2. | 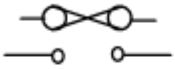 | Fuse switch |
| 3. | | Fuse |
| 4. | | Neutral Link |
| 5. | | Kilowatt hour meter |
| 6. | | Miniature Circuit Breaker / Moulded Case Circuit Breaker (MCB / MCCB) |
| 7. | | Residual Current Device (RCD ) |
| 8. | 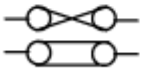 | Single phase cut out and neutral link |
| 9. | 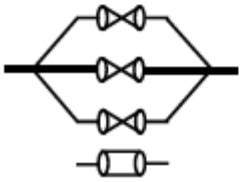 | Three phase cut out and neutral link |